5 Series

500A11

Geothermal Heat Pump

- R-410A Refrigerant
- 1, 1.5, 2, 2.5, 3, 3.5, 4, 5, 6 Ton Single Speed
- 2, 3, 4, 5, 6 Ton Dual Capacity

5 Series 500A11 Installation Manual

PROUD MEMBER

Water Source HP
ANSI/AHRI/ASHRAE/ISO13256-1

ENERGY STAR PARTNER

WaterFurnace®
Smarter from the Ground Up™

IM2500AN 03/12

Table of Contents

Model Nomenclature

1	2	3	4-6	7	8	9	10	11	12	13	14	15	16
N	D	V	049	F	1	1	1	C	T	L	0	A	N

Model Type
N = 5 Series Water-to-Air

Compressor Type
D = Dual Capacity
S = Single Speed

Cabinet Configuration
V = Vertical
H = Horizontal

Unit Capacity
012, 018, 022, 026, 030, 036, 038, 042, 048, 049, 060, 064, 070, 072 [2]

Vintage
F = Current

Voltage
1 = 208-230/60/1

Hot Water Generation
0 = No Hot Water Generation
1 = Hot Water Generation with factory installed pump (018-072)

Blower Options
0 = PSC
1 = ECM (018-072)
2 = High Static ECM (036-049)
3 = High Static PSC (022, 030, 036, 042, 048)
4 = X13 ECM (022-072)

IntelliStart Options
N = None
A = IntelliStart (022-072)

Controls Options
A = Aurora™ Base Control (ABC)
B = Aurora Advanced Control (ABC and AXB)
C = Aurora Performance Package
D = Aurora Performance and Refrigeration Package
Available July 1, 2012

Filter Option
0 = 2 in. MERV 11 Filter
1 = AlpinePure 411 (022-072) [1]

Return Air Configuration
L = Left
R = Right

Discharge Air Configuration
T = Top (vertical)
S = Side (horizontal)
E = End (horizontal)
B = Bottom (vertical)
R = Rear (vertical 042-072) [3]

Water Coil Options
C = Copper
N = Cupronickel

NOTES: All models include sound kits as standard equipment.
[1] Available on vertical configurations only (not available on horizontal models).
[2] Unit capacities 012 and 018 will be available July 1, 2012.
[3] Rear discharge air configuration will be available July 1, 2012.

General Installation Information

Safety Considerations

WARNING: Before performing service or maintenance operations on a system, turn off main power switches to the indoor unit. If applicable, turn off the accessory heater power switch. Electrical shock could cause personal injury.

Installing and servicing heating and air conditioning equipment can be hazardous due to system pressure and electrical components. Only trained and qualified service personnel should install, repair or service heating and air conditioning equipment. Untrained personnel can perform the basic maintenance functions of cleaning coils and cleaning and replacing filters. All other operations should be performed by trained service personnel. When working on heating and air conditioning equipment, observe precautions in the literature, tags and labels attached to the unit and other safety precautions that may apply.

Follow all safety codes. Wear safety glasses and work gloves. Use a quenching cloth for brazing operations and have a fire extinguisher available.

Moving and Storage

Move units in the normal “up” orientation. Horizontal units may be moved and stored per the information on the packaging. Do not stack more than three units in total height. Vertical units may be stored one upon another to a maximum height of two units. Do not attempt to move units while stacked. When the equipment is received, all items should be carefully checked against the bill of lading to be sure all crates and cartons have been received. Examine units for shipping damage, removing the units from the packaging if necessary. Units in question should also be internally inspected. If any damage is noted, the carrier should make the proper notation on the delivery receipt, acknowledging the damage.

Unit Location

Locate the unit in an indoor area that allows for easy removal of the filter and access panels. Location should have enough space for service personnel to perform maintenance or repair. Provide sufficient room to make water, electrical and duct connection(s). If the unit is located in a confined space, such as a closet, provisions must be made for return air to freely enter the space by means of a louvered door, etc. Any access panel screws that would be difficult to remove after the unit is installed should be removed prior to setting the unit. On horizontal units, allow adequate room below the unit for a condensate drain trap and do not locate the unit above supply piping. **Care should be taken when units are located in unconditioned spaces to prevent damage from frozen water lines and excessive heat that could damage electrical components.**

Filter Rack Conversion

A 2 in. MERV 11 filter is shipped with the heat pump. To field convert the filter rack to use 1 in. filters, simply insert the provided plastic push pins into the holes located in the filter rack. There are holes on the top and bottom of the rack, underneath the instruction labels, for field conversion to 1 in. filters.

Installing Vertical Units

Prior to setting the unit in place, remove and discard the compressor hold down shipping bolt located at the front of the compressor mounting bracket.

Vertical units are available in left or right air return configurations. Top and rear air discharge vertical units should be mounted level on a vibration absorbing pad slightly larger than the base to provide isolation between the unit and the floor. It is not necessary to anchor the unit to the floor (see below).

Bottomflow units should be mounted level and sealed well to floor to prevent air leakage. Bottomflow units require the supply air opening to be cut at least 1/2 in. larger than the unit’s air outlet. Protect the edges of combustible flooring with sheet metal over-wrap or other non-combustible material.

Figure 1: Vertical Unit Mounting

General Installation Information cont.

Installing Horizontal Units

Remove and discard the compressor hold down shipping bolt located at the front of the compressor mounting bracket prior to setting the unit in place. Horizontal units are available with side or end discharge. Horizontal units are normally suspended from a ceiling by four or six 3/8 in. diameter threaded rods. The rods are usually attached to the unit by hanger bracket kits furnished with each unit.

Lay out the threaded rods per the dimensions in Figure 3. Assemble the hangers to the unit as shown. Securely tighten the brackets to the unit using the weld nuts located on the underside of the bottom panel. When attaching the hanger rods to the bracket, a double nut is required since vibration could loosen a single nut. To allow filter access, one bracket on the filter side should be installed 180° from the position shown in Figure 3. The unit should be pitched approximately 1/4-inch towards the drain in both directions to facilitate the removal of condensate. Use only the bolts provided in the kit to attach hanger brackets. The use of longer bolts could damage internal parts.

Figure 2: Horizontal Unit Mounting

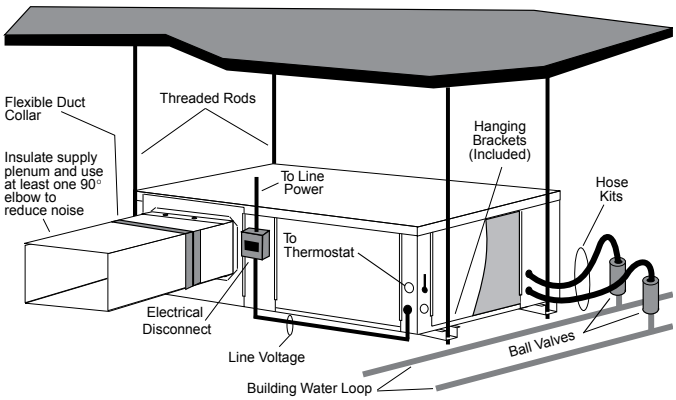

Some residential applications require the installation of horizontal units on an attic floor. In this case, the unit should be set in a full size secondary drain pan on top of a vibration absorbing pad. The secondary drain pan prevents possible condensate overflow or water leakage damage to the ceiling. The secondary drain pan is usually placed on a plywood base isolated from the ceiling joists by additional layers of vibration absorbing material.

CAUTION: Do not use rods smaller than 3/8-inch diameter since they may not be strong enough to support the unit. The rods must be securely anchored to the ceiling.

General Installation Information cont.

Figure 3: Hanger Location and Assembly

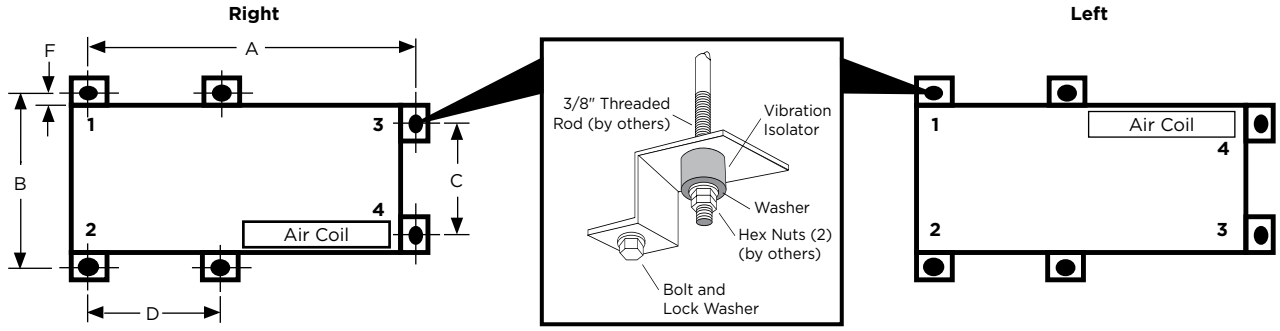

Hanger Dimensions

Model			Hanger Kit Part Number	Unit Hanger Dimensions			
				A	B	C	D
Single Speed	012	in.	99S500A04	44.7	25.1	21.4	n/a
		cm.		113.5	63.8	54.4	n/a
	018	in.	99S500A04	53.7	25.1	21.4	n/a
		cm.		136.4	63.8	54.4	n/a
	022-030	in.	99S500A04	63.4	24.8	21.1	n/a
		cm.		161.0	63.0	53.6	n/a
	036	in.	99S500A03	72.4	27.8	24.1	29.3
		cm.		183.9	70.6	61.2	74.4
	042-048	in.	99S500A03	77.4	27.8	24.1	29.3
		cm.		196.6	70.6	61.2	74.4
	060-070	in.	99S500A03	82.4	27.8	24.1	29.3
		cm.		209.3	70.6	61.2	74.4
Dual Capacity	026	in.	99S500A04	63.4	24.8	21.1	n/a
		cm.		161.0	63.0	53.6	n/a
	038	in.	99S500A03	72.4	27.8	24.1	29.3
		cm.		183.9	70.6	61.2	74.4
	049	in.	99S500A03	77.4	27.8	24.1	29.3
		cm.		196.6	70.6	61.2	74.4
	064	in.	99S500A03	82.4	27.8	24.1	29.3
		cm.		209.3	70.6	61.2	74.4
	072	in.	99S500A03	82.4	27.8	24.1	29.3
		cm.		209.3	70.6	61.2	74.4

2/8/12

Weight Distribution

Model		Vertical Shipping Weight	Horizontal Shipping Weight	Horizontal Weight Distribution			
				Front		Back	
				1	2	3	4
Single Speed	012	185	185	70	45	45	25
		[84]	[84]	[32]	[20]	[20]	[11]
	018	220	220	84	44	59	33
		[100]	[100]	[38]	[20]	[27]	[15]
	022	313	320	122	64	86	48
		[142]	[145]	[55]	[29]	[39]	[22]
	030	328	335	130	42	105	59
		[149]	[152]	[59]	[19]	[47]	[27]
	036	373	388	147	94	94	52
		[169]	[176]	[67]	[43]	[43]	[24]
	042	388	423	161	56	130	76
		[176]	[192]	[73]	[25]	[59]	[35]
	048	428	438	136	114	123	66
		[194]	[199]	[62]	[52]	[56]	[30]
	060	463	473	147	123	132	71
		[210]	[214]	[67]	[56]	[60]	[32]
	070	488	498	154	129	139	75
		[221]	[226]	[70]	[59]	[63]	[34]
Dual Capacity	026	313	320	121	78	78	43
		[142]	[145]	[55]	[35]	[35]	[20]
	038	378	388	147	94	94	52
		[171]	[176]	[67]	[43]	[43]	[24]
	049	428	438	136	114	123	66
		[194]	[199]	[62]	[52]	[56]	[30]
	064	473	483	150	126	135	72
		[214]	[219]	[68]	[57]	[61]	[33]
	072	488	500	155	130	140	75
		[221]	[226]	[70]	[59]	[64]	[34]

Weights are listed in lbs. [kg]

2/29/12

General Installation Information cont.

Duct System

An air outlet collar is provided on vertical top and rear air discharge units and all horizontal units to facilitate a duct connection (vertical bottomflow units have no collar). A flexible connector is recommended for discharge and return air duct connections on metal duct systems. Uninsulated duct should be insulated with a minimum of 1-inch duct insulation. Application of the unit to uninsulated ductwork in an unconditioned space is not recommended as the unit's performance will be adversely affected.

If the unit is connected to existing ductwork, check the duct system to ensure that it has the capacity to accommodate the air required for the unit application. If the duct is too small, as in the replacement of heating only systems, larger ductwork should be installed. All existing ductwork should be checked for leaks and repaired if necessary.

The duct system should be sized to handle the design airflow quietly and efficiently. To maximize sound attenuation of the unit blower, the supply and return plenums should include an internal duct liner of fiberglass or constructed of ductboard for the first few feet. On systems employing a sheet metal duct system, canvas connectors should be used between the unit and the ductwork. If air noise or excessive airflow is a problem, the blower speed can be changed.

Water Piping

The proper water flow must be provided to each unit whenever the unit operates. To assure proper flow, use pressure/temperature ports to determine the flow rate. These ports should be located at the supply and return water connections on the unit. The proper flow rate cannot be accurately set without measuring the water pressure drop through the refrigerant-to-water heat exchanger.

All source water connections on residential units are swivel piping fittings (see Figure 4) that accept a 1-inch male pipe thread (MPT). The swivel connector has a rubber gasket seal similar to a rubber hose gasket, which when mated to the flush end of any 1-inch threaded pipe provides a leak-free seal without the need for thread sealing tape or compound. Check to ensure that the rubber seal is in the swivel connector prior to attempting any connection. The rubber seals are shipped attached to the waterline. To make the connection to a ground loop system, mate the brass connector (supplied in CK4LI connector kit) against the rubber gasket in the swivel connector and thread the female locking ring onto the pipe threads, while maintaining the brass connector in the desired direction. Tighten the connectors by hand, then gently snug the fitting with pliers to provide a leak-proof joint. When connecting to an open loop (ground water) system, thread any 1-inch MPT fitting (SCH80 PVC or copper) into the swivel connector and tighten in the same manner as noted above. The open and closed loop piping system should include pressure/temperature taps for serviceability.

Never use flexible hoses smaller than 1-inch inside diameter on the unit. Limit hose length to 10 feet per connection. Check carefully for water leaks.

Figure 4: Swivel Connections

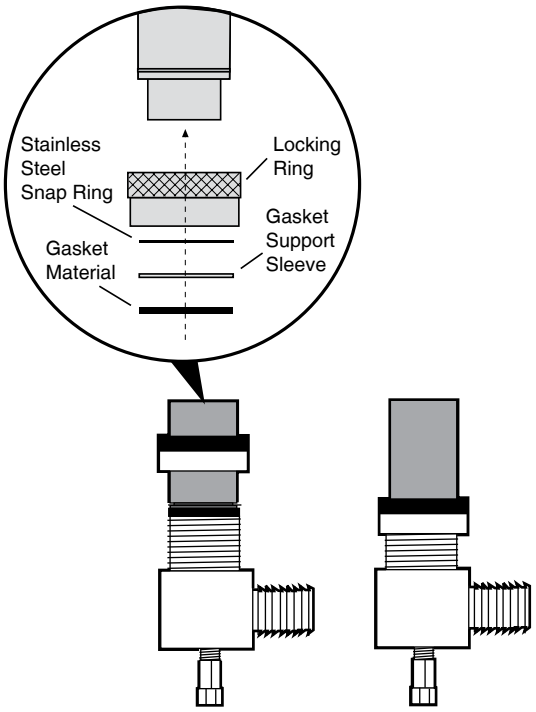

General Installation Information cont.

Water Quality

In ground water situations where scaling could be heavy or where biological growth such as iron bacteria will be present, a closed loop system is recommended. The heat exchanger coils in ground water systems may, over a period of time, lose heat exchange capabilities due to a buildup of mineral deposits inside. These can be cleaned, but only by a qualified service mechanic, as special solutions and pumping equipment are required. Hot water generator coils can likewise become scaled and possibly plugged. In areas with extremely hard water, the owner should be informed that the heat exchanger may require occasional flushing.

Units with cupronickel heat exchangers are recommended for open loop applications due to the increased resistance to build-up and corrosion, along with reduced wear caused by acid cleaning. Failure to adhere to the guidelines in the water quality table could result in the loss of warranty.

Material		Copper	90/10 Cupronickel	316 Stainless Steel
pH	Acidity/Alkalinity	7 - 9	7 - 9	7 - 9
Scaling	Calcium and Magnesium Carbonate	(Total Hardness) less than 350 ppm	(Total Hardness) less than 350 ppm	(Total Hardness) less than 350 ppm
Corrosion	Hydrogen Sulfide	Less than 0.5 ppm (rotten egg smell appears at 0.5 ppm)	10 - 50 ppm	Less than 1 ppm
	Sulfates	Less than 125 ppm	Less than 125 ppm	Less than 200 ppm
	Chlorine	Less than 0.5 ppm	Less than 0.5 ppm	Less than 0.5 ppm
	Chlorides	Less than 20 ppm	Less than 125 ppm	Less than 300 ppm
	Carbon Dioxide	Less than 50 ppm	10 - 50 ppm	10 - 50 ppm
	Ammonia	Less than 2 ppm	Less than 2 ppm	Less than 20 ppm
	Ammonia Chloride	Less than 0.5 ppm	Less than 0.5 ppm	Less than 0.5 ppm
	Ammonia Nitrate	Less than 0.5 ppm	Less than 0.5 ppm	Less than 0.5 ppm
	Ammonia Hydroxide	Less than 0.5 ppm	Less than 0.5 ppm	Less than 0.5 ppm
	Ammonia Sulfate	Less than 0.5 ppm	Less than 0.5 ppm	Less than 0.5 ppm
	Total Dissolved Solids (TDS)	Less than 1000 ppm	1000 - 1500 ppm	1000 - 1500 ppm
	LSI Index	+0.5 to -0.5	+0.5 to -0.5	+0.5 to -0.5
Iron Fouling (Biological Growth)	Iron, FE^{2}+ (Ferrous) Bacterial Iron Potential	< 0.2 ppm	< 0.2 ppm	< 0.2 ppm
	Iron Oxide	Less than 1 ppm, above this level deposition will occur	Less than 1 ppm, above this level deposition will occur	Less than 1 ppm, above this level deposition will occur
Erosion	Suspended Solids	Less than 10 ppm and filtered for max. of 600 micron size	Less than 10 ppm and filtered for max. of 600 micron size	Less than 10 ppm and filtered for max. of 600 micron size
	Threshold Velocity (Fresh Water)	< 6 ft/sec	< 6 ft/sec	< 6 ft/sec

NOTES: Grains = ppm divided by 17
mg/L is equivalent to ppm

2/22/12

Low Water Coil Limit

Set the freeze sensing switch SW2-1 on the Aurora Base Control (ABC) printed circuit board for applications using a closed loop antifreeze solution to “LOOP” (15°F). On applications using an open loop/ground water system (or closed loop no antifreeze), set this dip switch to “WELL” (30°F), the factory default setting. (Refer to the DIP Switch Settings table in the Aurora Control section.)

Condensate Drain

On vertical units, the internal condensate drain assembly consists of a drain tube which is connected to the drain pan, a 3/4-inch PVC female adapter and a flexible connecting hose. The female adapter may exit either the front or the side of the cabinet. The adapter should be glued to the field-installed PVC condensate piping. On vertical units, a condensate hose is inside all cabinets as a trapping loop; therefore, an external trap is not necessary.

On horizontal units, a PVC stub is provided for condensate drain piping connection. An external trap is required (see below). If a vent is necessary, an open stand pipe may be applied to a tee in the field-installed condensate piping.

Figure 5: Horizontal Drain Connection

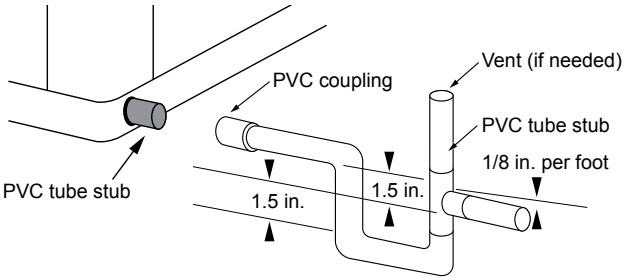

NOTE: Check dimensional data for actual PVC sizes.

Figure 6: Unit Pitch for Drain

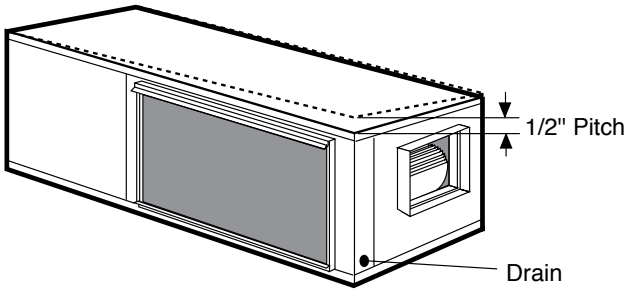

Closed Loop Ground Source Systems

NOTE: For closed loop systems with antifreeze protection, set SW2-1 to the "LOOP" (15°F) position. (Refer to the DIP Switch Settings table in the Aurora Control section.)

Once piping is completed between the unit, pumps and the ground loop (see figure below), final purging and charging of the loop is required. A flush cart (or a 1.5 HP pump minimum) is needed to achieve adequate flow velocity in the loop to purge air and dirt particles from the loop itself. Antifreeze solution is used in most areas to prevent freezing. Flush the system adequately to remove as much air as possible then pressurize the loop to a static pressure of 40-50 psi (summer) or 50-75 psi (winter). This is normally adequate for good system operation. Loop static pressure will fluctuate with the seasons. Pressures will be higher in the winter months than during the cooling season. This fluctuation is normal and should be considered when initially charging the system.

After pressurization, be sure to turn the venting (burping) screw in the center of the pump two (2) turns open (water will drip out), wait until all air is purged from the pump, then tighten the plug. Ensure that the loop pumps provide adequate flow through the unit(s) by checking the pressure drop across the heat exchanger and comparing it to the unit capacity data in this catalog. 2.5 to 3 gpm of flow per ton of cooling capacity is recommended in earth loop applications.

Figure 7: Closed Loop Ground Source Application

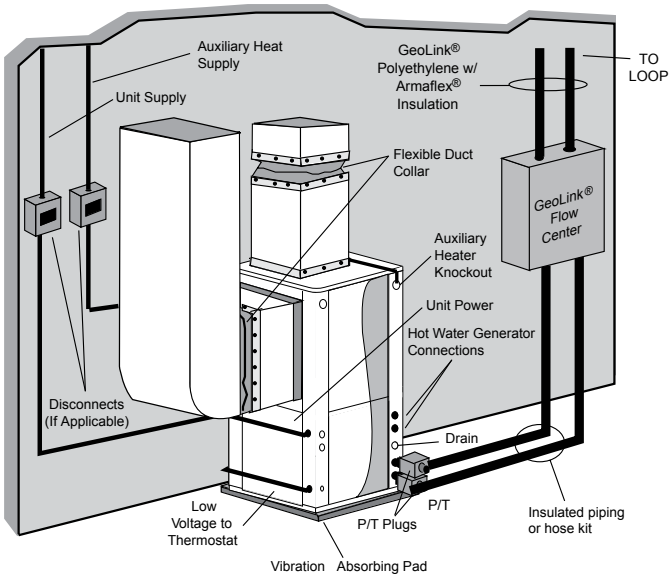

NOTE: Additional information can be found in Flow Center installation manual and Flush Cart manual.

Multiple Units on One Flow Center

NOTE: This feature is only available in the Aurora Advanced Control package (AXB board), NOT the Aurora Base Control (ABC).

When two units are connected to one loop pumping system, pump control is automatically achieved by connecting the SL terminals on connector P2 in both units with 2-wire thermostat wire. These terminals are polarity dependant (see Figure 8b). The loop pump(s) may be powered from either unit, whichever is more convenient. If either unit calls, the loop pump(s) will automatically start. The use of two units on one flow center is generally limited to a total of 20 gpm capacity.

NOTE: To achieve this same feature when heat pumps have only the Aurora Base Control, follow Figure 8A. Installer will be required to supply two relays and wiring.

Figure 8a: Primary/Secondary Wiring with Aurora Base Control (no AXB Board)

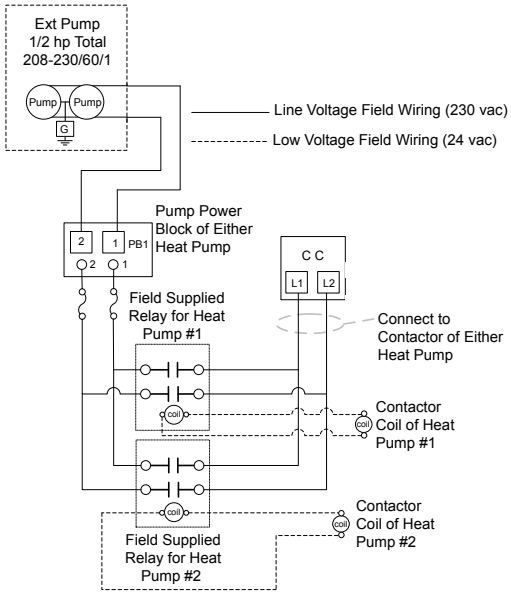

Figure 8b: Primary/Secondary Hook-up

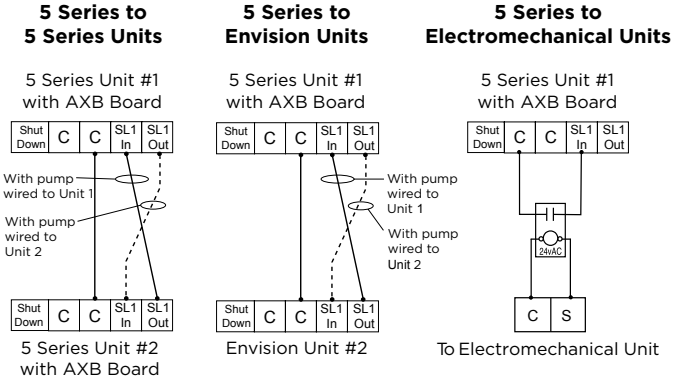

Open Loop Ground Water Systems

Typical open loop piping is shown below. Always maintain water pressure in the heat exchanger by placing water control valves at the outlet of the unit to prevent mineral precipitation. Use a closed, bladder-type expansion tank to minimize mineral formation due to air exposure. Insure proper water flow through the unit by checking pressure drop across the heat exchanger and comparing it to the figures in unit capacity data tables in the specification catalog. 1.5-2 gpm of flow per ton of cooling capacity is recommended in open loop applications.

Discharge water from the unit is not contaminated in any manner and can be disposed of in various ways, depending on local codes, i.e. recharge well, storm sewer, drain field, adjacent stream or pond, etc. Most local codes forbid the use of sanitary sewer for disposal. Consult your local building and zoning departments to assure compliance in your area.

NOTE: For open loop/groundwater systems or systems that do not contain an antifreeze solution, set SW2-Switch #1 to the "WELL" (30°F) position. (Refer to the DIP Switch Settings table in the Aurora Control section.) Slow opening/closing solenoid valves (type VM) are recommended to eliminate water hammer.

Figure 9a: Open Loop Solenoid Valve Connection Option
Typical quick operating external 24V water solenoid valve (type PPV100 or BPV100) wiring.

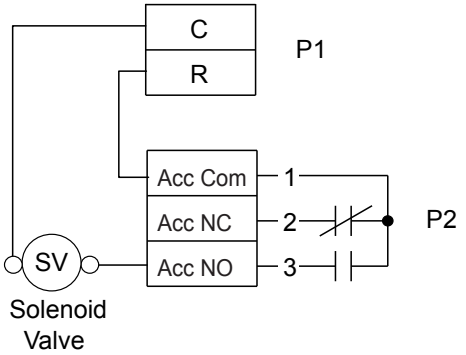

NOTE: SW2-4 and SW2-5 should be "OFF" to cycle with the compressor.

Figure 9b: Open Loop Solenoid Valve Connection Option
Typical slow operating external 24V water solenoid valve (type VM) wiring and one (1) quick operating valve.

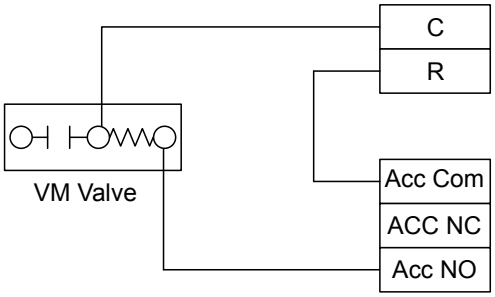

NOTE: SW2-4 should be "OFF" and SW2-5 should be "ON" when using a slow opening (VM) water valve.

Figure 10: Open System - Groundwater Application

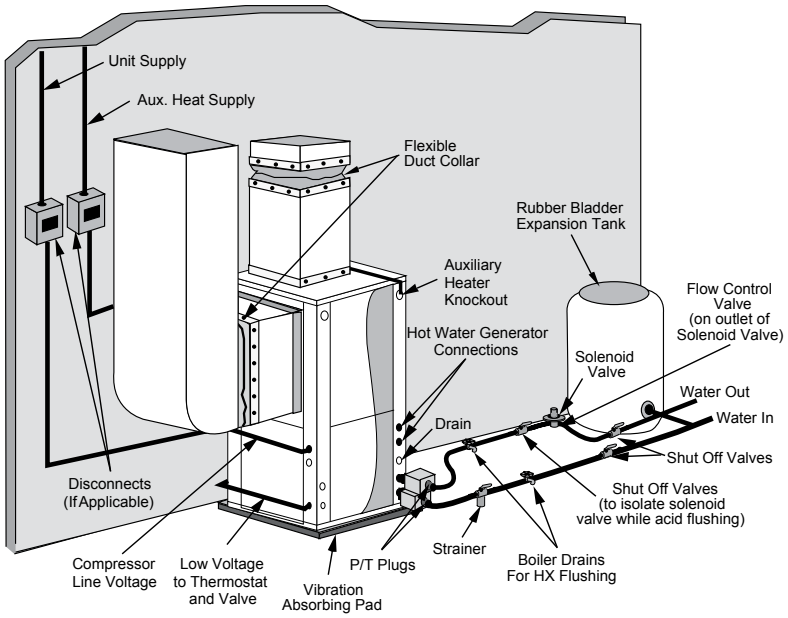

Hot Water Generator Connections

To maximize the benefits of the hot water generator a minimum 50-gallon water heater is recommended For higher demand applications, use an 80-gallon water heater or two 50-gallon water heaters connected in a series as shown below. Two tanks plumbed in a series is recommended to maximize the hot water generator capability. Electric water heaters are recommended. Make sure all local electrical and plumbing codes are met for installing a hot water generator. Residential units with hot water generators contain an internal circulator and fittings. A water softener is recommended with hard water (greater than 10 grains or 170 total hardness).

NOTES: 1) Using a preheat tank, as shown in Figure 12, will maximize hot water generator capabilities. 2) The hot water generator coil is constructed of vented double wall copper suitable for potable water.

Water Tank Preparation

To install a unit with a hot water generator, follow these installation guidelines.

1. Turn off the power to the water heater.
2. Attach a water hose to the water tank drain connection and run the other end of the hose to an open drain or outdoors.
3. Close the cold water inlet valve to the water heater tank.
4. Drain the tank by opening the valve on the bottom of the tank, then open the pressure relief valve or hot water faucet.
5. Flush the tank by opening the cold water inlet valve to the water heater to free the tank of sediments. Close when draining water is clear.
6. Disconnect the garden hose and remove the drain valve from the water heater.
7. Refer to Plumbing Installation and Hot Water Generator Startup.

CAUTION: Elements will burn out if energized dry.

Figure 11: Typical Hot Water Generator Installation

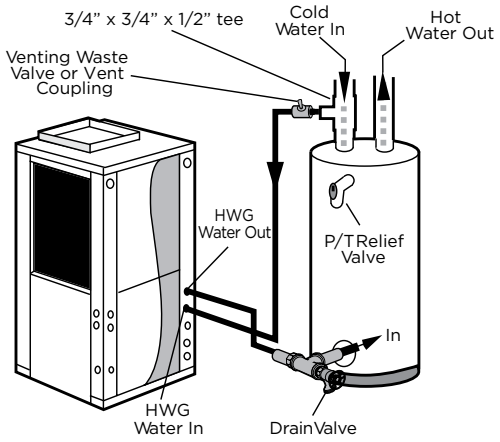

Figure 12: Hot Water Generator Installation In Preheat Tank

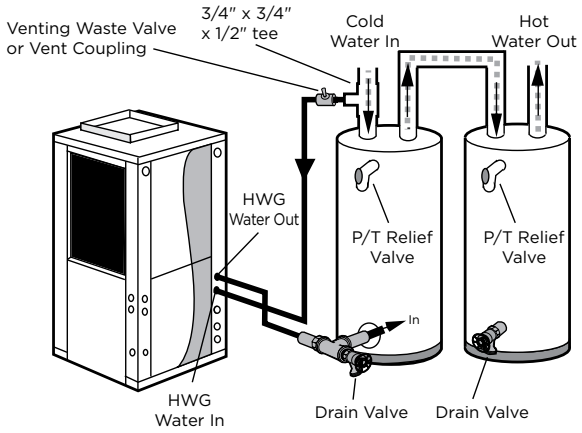

NOTE: This configuration maximizes hot water generator capability.

Hot Water Generator Connections cont.

Plumbing Installation

1. Inspect the dip tube in the water heater cold inlet for a check valve. If a check valve is present it must be removed or damage to the hot water generator circulator will occur.
2. Remove drain valve and fitting.
3. Thread the 3/4-inch NPT x 3-1/2-inch brass nipple into the water heater drain port.
4. Attach the center port of the 3/4-inch FPT tee to the opposite end of the brass nipple.
5. Attach the 1/2-inch copper to 3/4-inch NPT adaptor to the side of the tee closest to the unit.
6. Install the drain valve on the tee opposite the adaptor.
7. Run interconnecting tubing from the tee to hot water generator water out.
8. Cut the cold water "IN" line going to the water heater.
9. Insert the reducing solder tee in line with cold water "IN" line as shown.
10. Run interconnecting copper tubing between the unit hot water generator water "IN" and the tee (1/2-inch nominal). The recommended maximum distance is 50 feet.
11. To prevent air entrapment in the system, install a vent coupling at the highest point of the interconnecting lines.
12. Insulate all exposed surfaces of both connecting water lines with 3/8-inch wall closed cell insulation.

NOTE: All plumbing and piping connections must comply with local plumbing codes.

Hot Water Generator Switch
Connect power wires at startup.

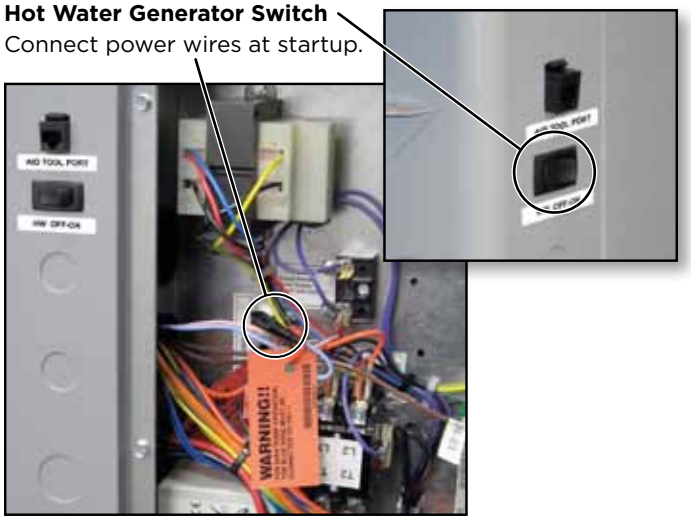

Hot Water Generator Startup

1. The hot water generator pump ships with the pump not wired to prevent running the pump without water. Once plumbing has been completed, the blue wire from the hot water generator ON/OFF switch will need to be connected to the source pump power supply at PB1-1. The blue wire will be wire tied to the wire bundle inside the control box and tagged with a warning label.
2. Turn the hot water generator switch to the "ON" position. The hot water generator switch will allow the hot water generator pump to be enabled or disabled by the service technician or homeowner.
3. Close the drain valve to the water heater.
4. Open the cold water supply to the tank.
5. Open a hot water faucet in the building to bleed air from the system. Close when full.
6. Open the pressure relief valve to bleed any remaining air from the tank, then close.
7. If so equipped, turn the venting (burping) screw in the center of the pump two (2) turns open (water will drip out), wait until all air is purged from the pump, then tighten the plug. Use vent couplings to bleed air from the lines.
8. Carefully inspect all plumbing for water leaks and correct as required.
9. Before restoring electrical supply to the water heater, adjust the temperature setting on the tank.
    - On tanks with both upper and lower elements, the lower element should be turned down to the lowest setting, approximately 100°F. The upper element should be adjusted to 120°F to 130°F. Depending upon the specific needs of the customer, you may want to adjust the upper element differently.
    - On tanks with a single element, lower the thermostat setting to 120°F.
10. After the thermostat(s) is adjusted, replace the access cover and restore electrical supply to the water heater.
11. Make sure that any valves in the hot water generator water circulating circuit are open.
12. Turn on the unit to first stage heating.
13. The hot water generator pump should be running. When the pump is first started, turn the venting (burping) screw (if equipped) in the center of the pump two (2) turns open until water dribbles out, then replace. Allow the pump to run for at least five minutes to ensure that water has filled the circulator properly. Be sure the switch for the hot water generator pump switch is "ON".
14. The temperature difference between the water entering and leaving the hot water generator should be 5°F to 15°F. The water flow should be approximately 0.4 gpm per ton of nominal cooling.
15. Allow the unit to heat water for 15 to 20 minutes to be sure operation is normal.

CAUTION: Never operate the HWG circulating pump while dry. If the unit is placed in operation before the hot water generator piping is connected, be sure that the pump switch is set to the OFF position.

Electrical Connections

General

Be sure the available power is the same voltage and phase as that shown on the unit serial plate. Line and low voltage wiring must be done in accordance with local codes or the National Electric Code, whichever is applicable.

Unit Power Connection

Connect the incoming line voltage wires to L1 and L2 of the contactor as shown in Figure 13C for single-phase unit. Consult the Unit Electrical Data in this manual for correct fuse sizes.

Open lower front access panel. Remove ground fastener from bottom of control box (Figure 13B). Swing open control box (Figure 13A). Insert power wires through knockouts on lower left side of cabinet. Route wires through left side of control box and connect to contactor and ground (Figure 13C). Close control box and replace grounding fastener before unit start-up.

Accessory Relay

A set of “dry” contacts has been provided to control accessory devices, such as water solenoid valves on open loop installations, electronic air cleaners, humidifiers, etc. This relay contact should be used only with 24 volt signals and not line voltage power. The relay has both normally open and normally closed contacts and can operate with either the fan or the compressor. Use DIP switch SW2-4 and 5 to cycle the relay with blower, compressor, or control a slow opening water valve. The relay contacts are available on terminals #2 and #3 of P2.

208 Volt Operation

All 208/230 units are factory wired for 230 volt operation. For 208 volt operation, the red and blue transformer wires must be switched on terminal strip PB2.

Figure 13A:
Wire access (control box open)

Wire Insert Location

Figure 13B:
Wire access (control box closed)

Ground Fastener must be installed for proper unit ground

Figure 13C:
Line Voltage 208-230/60/1 control box

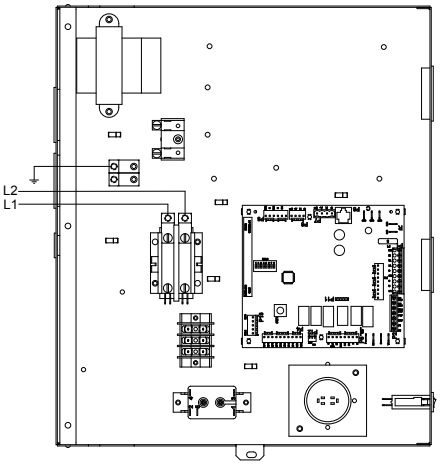

Electrical Connections cont.

Pump Wiring

See Figure 14 for electrical connections from control box to pumps.

Figure 14: Pump Wiring 208-230/60/1

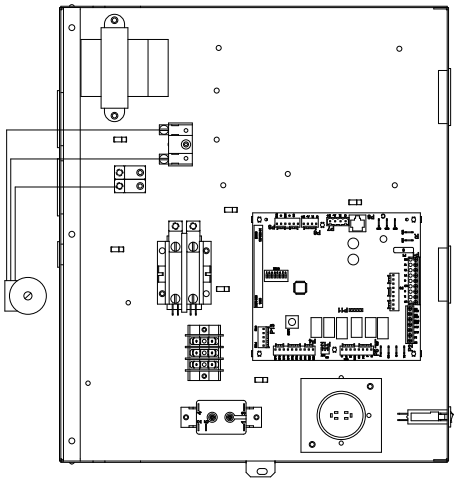

Electronic Thermostat Installation (Y1 Style Signals)

Position the thermostat subbase against the wall so that it is level and the thermostat wires protrude through the middle of the subbase. Mark the position of the subbase mounting holes and drill holes with a 3/16-inch bit. Install supplied anchors and secure base to the wall. Thermostat wire must be 8-conductor, 20-AWG (minimum) wire. Strip the wires back 1/4-inch (longer strip lengths may cause shorts) and insert the thermostat wires into the connector as shown. Tighten the screws to insure secure connections. The thermostat has the same type connectors, requiring the same wiring. See instructions enclosed in the thermostat for detailed installation and operation information.

NOTE: Aurora Base Control (ABC) DIP switch SW2-7 is required to be in the “OFF” position for the control to operate with FaultFlash or ComforTalk thermostats. SW2-7 in the “ON” position configures the control to operate with typical thermostats (continuous lockout signal). There must be a wire connecting Y2 on the Aurora controller to 2nd stage compressor on the thermostat for proper operation.

Figure 15: Thermostat Wiring

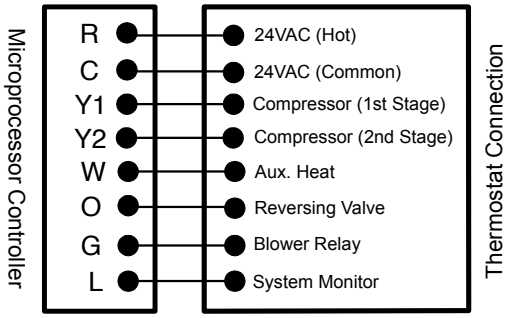

Auxiliary Heat Ratings

Model	kW		Stages	Btu/h		Min cfm	5 Series Compatibility					
	208V	230V		208V	230V		012	018	022	026 - 030	036 - 042	048 - 072
EAS(H)4	2.9	3.8	1	9,700	12,900	250	•					
EAM(H)5	3.6	4.8	1	12,300	16,300	450		•	•	•		
EAM(H)8	5.7	7.6	2	19,400	25,900	550		•	•	•		
EAM(H)10	7.2	9.6	2	24,600	32,700	650				•		
EAL(H)10	7.2	9.6	2	24,600	32,700	1100					•	•
EAL(H)15	10.8	14.4	3	36,900	49,100	1250					•	•
EAL(H)20	14.4	19.2	4	49,200	65,500	1500						•

Order the "H" part number when installed on horizontal and vertical rear discharge units 2/7/12

Auxiliary Heat Electrical Data

Model	Supply Circuit	Heater Amps		Min Circuit Amp		Fuse (USA)		Fuse (CAN)		CKT BRK	
		208 V	240 V	208 V	240 V	208 V	240 V	208 V	240 V	208 V	240 V
EAS(H)4	Single	13.7	15.8	17.9	20.5	20	20	20	20	20	20
EAM(H)5	Single	17.3	20.0	26.7	30.0	30	30	30	30	30	30
EAM(H)8	Single	27.5	31.7	39.3	44.6	40	45	40	45	40	45
EAM(H)10	Single	34.7	40.0	48.3	55.0	50	60	50	60	50	60
EAL(H)10	Single	34.7	40.0	53.3	60.0	60	60	60	60	60	60
EAL(H)15	Single	52.0	60.0	75.0	85.0	80	90	80	90	70	100
	L1/L2	34.7	40.0	53.3	60.0	60	60	60	60	60	60
	L3/L4	17.3	20.0	21.7	25.0	25	25	25	25	20	30
EAL(H)20	Single	69.3	80.0	96.7	110.0	100	110	100	110	100	100
	L1/L2	34.7	40.0	53.3	60.0	60	60	60	60	60	60
	L3/L4	34.7	40.0	43.3	50.0	45	50	45	50	40	50

All heaters rated single phase 60 cycle and include unit blower load 2/11/12
All fuses type "D" time delay (or HACR circuit breaker in USA)
Supply wire size to be determined by local codes

Electrical Data

Single Speed PSC Motor

Model	Rated Voltage	Voltage Min/Max	Compressor				HWG Pump FLA	Ext Loop FLA	Blower Motor FLA	Total Unit FLA	Min Circ Amp	Max Fuse/ HACR
			MCC	RLA	LRA	LRA**						
012	208-230/60/1	187/253	7.7	4.9	25.0	n/a	-	5.4	0.6	10.9	12.2	15
018	208-230/60/1	187/253	10.4	6.7	33.5	n/a	0.4	5.4	1.1	13.6	15.2	20
022	208-230/60/1	187/253	14.0	9.0	48.0	17.0	0.4	5.4	1.2	16.0	18.2	25
022*	208-230/60/1	187/253	14.0	9.0	48.0	17.0	0.4	5.4	1.5	16.3	18.5	25
030	208-230/60/1	187/253	20.0	12.8	58.3	21.0	0.4	5.4	1.5	20.1	23.3	35
030*	208-230/60/1	187/253	20.0	12.8	58.3	21.0	0.4	5.4	2.8	21.4	24.6	35
036	208-230/60/1	187/253	22.0	14.1	73.0	26.0	0.4	5.4	2.8	22.7	26.2	40
036*	208-230/60/1	187/253	22.0	14.1	73.0	26.0	0.4	5.4	3.5	23.4	26.9	40
042	208-230/60/1	187/253	26.0	16.6	79.0	28.0	0.4	5.4	3.5	25.9	30.1	45
042*	208-230/60/1	187/253	26.0	16.6	79.0	28.0	0.4	5.4	4.6	27.0	31.2	45
048	208-230/60/1	187/253	31.0	19.8	109.0	38.0	0.4	5.4	3.5	29.1	34.1	50
048*	208-230/60/1	187/253	31.0	19.8	109.0	38.0	0.4	5.4	4.6	30.2	35.2	50
060	208-230/60/1	187/253	41.2	26.4	134.0	47.0	0.4	5.4	5.9	38.1	44.7	70
070	208-230/60/1	187/253	44.2	28.3	158.0	63.0	0.4	5.4	5.9	41.8	49.3	70

2/7/12

Single Speed X13 ECM Motor

Model	Rated Voltage	Voltage Min/Max	Compressor				HWG Pump FLA	Ext Loop FLA	Blower Motor FLA	Total Unit FLA	Min Circ Amp	Max Fuse/ HACR
			MCC	RLA	LRA	LRA**						
022	208-230/60/1	187/253	14.0	9.0	48.0	17.0	0.4	5.4	4.1	18.9	21.1	30
030	208-230/60/1	187/253	20.0	12.8	58.3	21.0	0.4	5.4	4.1	22.7	25.9	35
036	208-230/60/1	187/253	22.0	14.1	73.0	26.0	0.4	5.4	4.1	24.0	27.5	40
042	208-230/60/1	187/253	26.0	16.6	79.0	28.0	0.4	5.4	7.6	30.0	34.2	50
048	208-230/60/1	187/253	31.0	19.8	109.0	38.0	0.4	5.4	7.6	33.2	38.2	50
060	208-230/60/1	187/253	41.2	26.4	134.0	47.0	0.4	5.4	7.6	39.8	46.4	70
070	208-230/60/1	187/253	44.2	28.3	178.0	63.0	0.4	5.4	7.6	41.7	48.8	70

1/25/12

Single Speed ECM2.3 Motor

Model	Rated Voltage	Voltage Min/Max	Compressor				HWG Pump FLA	Ext Loop FLA	Blower Motor FLA	Total Unit FLA	Min Circ Amp	Max Fuse/ HACR
			MCC	RLA	LRA	LRA**						
018	208-230/60/1	187/253	10.4	6.7	33.5	n/a	0.4	5.4	4	16.5	18.1	20
022	208-230/60/1	187/253	14.0	9.0	48.0	17.0	0.4	5.4	4.0	18.8	21.0	30
030	208-230/60/1	187/253	20.0	12.8	58.3	21.0	0.4	5.4	4.0	22.6	25.8	35
036	208-230/60/1	187/253	22.0	14.1	73.0	26.0	0.4	5.4	4.0	23.9	27.4	40
036*	208-230/60/1	187/253	22.0	14.1	73.0	26.0	0.4	5.4	7.0	26.9	30.4	40
042	208-230/60/1	187/253	26.0	16.6	79.0	28.0	0.4	5.4	4.0	26.4	30.6	45
042*	208-230/60/1	187/253	26.0	16.6	79.0	28.0	0.4	5.4	7.0	29.4	33.6	50
048	208-230/60/1	187/253	31.0	19.8	109.0	38.0	0.4	5.4	4.0	29.6	34.6	50
048*	208-230/60/1	187/253	31.0	19.8	109.0	38.0	0.4	5.4	7.0	32.6	37.6	50
060	208-230/60/1	187/253	41.2	26.4	134.0	47.0	0.4	5.4	7.0	39.2	45.8	70
070	208-230/60/1	187/253	44.2	28.3	178.0	63.0	0.4	5.4	7.0	41.1	48.2	70

2/7/12

* With optional 1 HP ECM2.3 motor
** With optional IntelliStart®
Rated voltage of 208/230/60/1
All fuses Class RK-5
HACR circuit breaker in USA only

Electrical Data cont.

Dual Capacity X13 ECM Motor

Model	Rated Voltage	Voltage Min/Max	Compressor				HWG Pump FLA	Ext Loop FLA	Blower Motor FLA	Total Unit FLA	Min Circ Amp	Max Fuse/ HACR
			MCC	RLA	LRA	LRA**						
026	208-230/60/1	187/253	18.2	11.6	58.3	21.0	0.4	5.4	4.1	21.5	24.5	35
038	208-230/60/1	187/253	23.8	15.2	83.0	30.0	0.4	5.4	4.1	25.1	28.9	40
049	208-230/60/1	187/253	33.0	21.1	104.0	37.0	0.4	5.4	7.6	34.5	39.8	60
064	208-230/60/1	187/253	42.3	27.1	152.9	54.0	0.4	5.4	7.6	40.5	47.2	70
072	208-230/60/1	187/253	46.3	29.6	179.2	63.0	0.4	5.4	7.6	43.0	50.4	80

1/25/12

Dual Capacity ECM2.3 Motor

Model	Rated Voltage	Voltage Min/Max	Compressor				HWG Pump FLA	Ext Loop FLA	Blower Motor FLA	Total Unit FLA	Min Circ Amp	Max Fuse/ HACR
			MCC	RLA	LRA	LRA**						
026	208-230/60/1	187/253	18.2	11.6	58.3	21.0	0.4	5.4	4.0	21.4	24.4	35
038	208-230/60/1	187/253	23.8	15.2	83.0	30.0	0.4	5.4	4.0	25.0	28.8	40
038*	208-230/60/1	187/253	23.8	15.2	83.0	30.0	0.4	5.4	7.0	28.0	31.8	50
049	208-230/60/1	187/253	33.0	21.1	104.0	37.0	0.4	5.4	4.0	30.9	36.2	50
049*	208-230/60/1	187/253	33.0	21.1	104.0	37.0	0.4	5.4	7.0	33.9	39.2	60
064	208-230/60/1	187/253	42.3	27.1	152.9	54.0	0.4	5.4	7.0	39.9	46.6	70
072	208-230/60/1	187/253	46.3	29.6	179.2	63.0	0.4	5.4	7.0	42.4	49.8	70

1/25/12

* With optional 1 HP ECM2.3 motor
** With optional IntelliStart®
Rated voltage of 208/230/60/1
All fuses Class RK-5
HACR circuit breaker in USA only

Blower Performance Data

Standard PSC Motor

Model	Motor Spd	Blower Size	Motor HP	Airflow (cfm) at External Static Pressure (in. wg)															
				0	0.05	0.10	0.15	0.20	0.25	0.30	0.35	0.40	0.45	0.50	0.60	0.70	0.80	0.90	1.00
012	**H**	6 x 8	1/10	480	450	440	420	410	380	360	340	330	310	300	-	-	-	-	-
	MH*			440	410	400	380	370	350	330	310	300	280	270	-	-	-	-	-
	ML			395	370	360	340	330	310	290	280	270	250	240	-	-	-	-	-
	L			325	310	300	280	270	250	240	230	220	210	200	-	-	-	-	-
018	H	9 x 7	1/6	845	835	825	815	800	790	775	755	735	710	680	565	-	-	-	-
	M			735	730	725	715	705	700	690	675	660	630	600	485	-	-	-	-
	L			620	615	610	605	600	590	580	565	550	520	490	-	-	-	-	-
022	H	9 x 7	1/5	1110	1095	1080	1065	1045	1020	995	970	945	915	880	810	-	-	-	-
	M			850	845	835	825	815	805	795	775	755	735	715	-	-	-	-	-
	L			750	745	740	735	725	715	700	685	670	650	630	-	-	-	-	-
030	H	9 x 7	1/3	1290	1270	1245	1220	1190	1160	1125	1090	1055	1020	985	880	760	-	-	-
	M			1100	1090	1075	1060	1045	1020	995	970	940	910	875	785	625	-	-	-
	L			910	905	900	895	885	875	865	850	835	810	780	710	560	-	-	-
036	H	10 x 10	1/2	1665	1640	1610	1580	1550	1515	1480	1450	1415	1315	1215	1090	980	-	-	-
	M			1465	1445	1425	1400	1375	1350	1325	1260	1190	1140	1090	990	890	-	-	-
	L			1130	1115	1100	1090	1075	1035	995	965	930	895	860	795	730	-	-	-
042	H	10 x 10	1/2	2010	1975	1940	1905	1870	1825	1780	1735	1690	1640	1590	1470	1210	-	-	-
	M			1670	1650	1630	1610	1590	1560	1530	1495	1460	1425	1390	1190	1080	-	-	-
	L			1220	1215	1210	1295	1200	1180	1160	1130	1100	1060	1020	930	-	-	-	-
048	H	10 x 10	1/2	2010	1975	1940	1905	1870	1825	1780	1735	1690	1640	1590	1470	1210	-	-	-
	M			1670	1650	1630	1610	1590	1560	1530	1495	1460	1425	1390	1190	1080	-	-	-
	L			1220	1215	1210	1295	1200	1180	1160	1130	1100	1060	1020	930	-	-	-	-
060	H	11 x 10	1	2430	2400	2365	2330	2290	2255	2215	2180	2140	2095	2045	1945	1835	1715	1510	1330
	M			2265	2235	2205	2175	2145	2110	2070	2035	2000	1960	1915	1825	1730	1605	1440	1260
	L			2075	2050	2020	1995	1965	1940	1915	1885	1850	1820	1785	1720	1610	1505	1335	1175
070	**H**	11 x 10	1	2430	2400	2365	2330	2290	2255	2215	2180	2140	2095	2045	1945	1835	1715	1510	1330
	M			2265	2235	2205	2175	2145	2110	2070	2035	2000	1960	1915	1825	1730	1605	1440	1260
	L			2075	2050	2020	1995	1965	1940	1915	1885	1850	1820	1785	1720	1610	1505	1335	1175

2/7/12

Optional High Static PSC Motor

Model	Motor Spd	Blower Size	Motor HP	Airflow (cfm) at External Static Pressure (in. wg)															
				0	0.05	0.10	0.15	0.20	0.25	0.30	0.35	0.40	0.45	0.50	0.60	0.70	0.80	0.90	1.00
022	H	9 x 7	1/3	1290	1270	1245	1220	1190	1160	1125	1090	1055	1020	985	880	760	-	-	-
	M			1100	1090	1075	1060	1045	1020	995	970	940	910	875	785	625	-	-	-
	L			910	905	900	895	885	875	865	850	835	810	780	710	560	-	-	-
030	H	9 x 7	1/2	1365	1340	1325	1305	1280	1250	1215	1180	1140	1100	1055	960	850	-	-	-
	M			1040	1040	1035	1030	1020	1005	990	970	945	915	885	810	735	-	-	-
	L			880	880	880	880	875	870	860	840	820	800	775	730	480	-	-	-
036	H	10 x 10	1/2	1930	1905	1875	1840	1805	1765	1725	1680	1635	1530	1425	1270	1150	1025	-	-
	M			1635	1620	1600	1580	1555	1530	1505	1465	1425	1335	1240	1135	1035	775	-	-
	L			1230	1230	1225	1215	1200	1165	1130	1095	1060	1035	1005	935	795	675	-	-
042	H	10 x 10	3/4	2115	2075	2035	1980	1920	1900	1880	1840	1795	1730	1660	1390	1225	1070	-	-
	M			2005	1980	1950	1910	1865	1815	1765	1725	1685	1585	1485	1315	1140	1025	-	-
	L			1860	1835	1805	1780	1750	1715	1675	1635	1590	1540	1490	1260	1115	980	-	-
048	H	10 x 10	3/4	2115	2075	2035	1980	1920	1900	1880	1840	1795	1730	1660	1390	1225	1070	-	-
	M			2005	1980	1950	1910	1865	1815	1765	1725	1685	1585	1485	1315	1140	1025	-	-
	L			1860	1835	1805	1780	1750	1715	1675	1635	1590	1540	1490	1260	1115	980	-	-

Factory settings are in Bold 1/25/12

High-Static option not available for 012, 018, 060, and 070

Air flow values are with dry coil and standard filter

For wet coil performance first calculate the face velocity of the air coil (Face Velocity [fpm] = Airflow [cfm] / Face Area [sq ft]). Then for velocities of 200 fpm reduce the static capability by 0.03 in. wg, 300 fpm by 0.08 in. wg, 400 fpm by 0.12in. wg. and 500 fpm by 0.16 in. wg.

Setting Blower Speed - PSC

CAUTION: Disconnect all power before performing this operation.

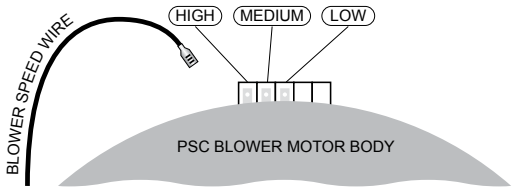

Blower Performance Data cont.

Single Speed X13 Motor

Model	Motor Speed	Motor Tap	T'stat Cnct.	Blower Size	Motor HP	Airflow (cfm) at External Static Pressure (in. wg)															
						0	0.05	0.10	0.15	0.20	0.25	0.30	0.35	0.40	0.45	0.50	0.60	0.70	0.80	0.90	1.00
022	**High**	**5**	W	9 x 7	1/2	980	960	940	930	920	905	890	875	860	840	820	800	745	-	-	-
	Med High	**4**	Y1			890	878	865	845	825	813	800	785	770	753	735	710	665	-	-	-
	Med	3				830	815	800	788	775	755	735	723	710	690	670	640	600	-	-	-
	Med Low	**2**	G			780	760	740	703	665	653	640	620	600	585	570	-	-	-	-	-
	Low	1				625	593	560	535	510	495	480	455	430	410	390	-	-	-	-	-
030	High	5		9 x 7	1/2	1407	1381	1354	1327	1300	1267	1233	1201	1168	1131	1094	1009	-	-	-	-
	Med High	**4**	W			1146	1134	1122	1111	1099	1085	1071	1062	1052	1042	1031	966	-	-	-	-
	Med	**3**	Y1			1023	1012	1001	985	969	959	949	937	925	913	901	-	-	-	-	-
	Med Low	2				978	962	946	934	922	907	891	882	872	858	843	-	-	-	-	-
	Low	**1**	G			795	777	759	748	737	718	698	686	673	650	626	-	-	-	-	-
036	**High**	**5**	W	11 x 10	1/2	1530	1503	1476	1453	1429	1413	1397	1376	1355	1342	1329	1276	1231	1173	-	-
	Med High	**4**	Y1			1413	1388	1363	1342	1321	1303	1285	1263	1240	1226	1212	1173	1016	946	-	-
	Med	3				1355	1325	1294	1276	1258	1235	1212	1188	1164	1144	1123	982	909	883	-	-
	Med Low	2				1336	1299	1261	1242	1222	1202	1181	1157	1132	1111	1090	937	874	830	-	-
	Low	**1**	G			1243	1182	1121	1061	1000	964	928	856	784	744	703	647	592	-	-	-
042	High	5		11 x 10	1	1934	1910	1886	1871	1855	1827	1799	1780	1760	1747	1734	1700	1659	1617	-	-
	Med High	**4**	W			1799	1783	1767	1744	1720	1693	1666	1649	1631	1617	1603	1560	1530	1492	-	-
	Med	3				1694	1680	1666	1642	1617	1592	1567	1552	1537	1519	1500	1453	1421	1372	-	-
	Med Low	**2**	Y1			1575	1560	1540	1520	1502	1487	1471	1448	1424	1409	1393	1351	1308	1266	-	-
	Low	**1**	G			1454	1406	1358	1333	1308	1285	1261	1239	1217	1198	1179	1072	1002	988	-	-
048	High	5		11 x 10	1	1934	1910	1886	1871	1855	1827	1799	1780	1760	1747	1734	1700	1659	1617	-	-
	Med High	**4**	W			1799	1783	1767	1744	1720	1693	1666	1649	1631	1617	1603	1560	1530	1492	-	-
	Med	**3**	Y1			1694	1680	1666	1642	1617	1592	1567	1552	1537	1519	1500	1453	1421	1372	-	-
	Med Low	2				1575	1560	1540	1520	1502	1487	1471	1448	1424	1409	1393	1351	1308	1266	-	-
	Low	**1**	G			1454	1406	1358	1333	1308	1285	1261	1239	1217	1198	1179	1072	1002	988	-	-
060	**High**	**5**	W	11 x 10	1	2245	2360	2214	2315	2173	2290	2136	2275	2103	2250	2070	2032	1998	1957	1910	1825
	Med High	4				2092	2073	2054	2035	2015	1995	1975	1958	1940	1922	1904	1880	1843	1806	1767	1728
	Med	3				1951	1931	1910	1889	1868	1850	1831	1812	1793	1774	1755	1722	1688	1654	1612	1562
	Med Low	**2**	Y1			1812	1796	1780	1761	1741	1718	1695	1682	1668	1651	1633	1591	1555	1518	1480	1433
	Low	**1**	G			1682	1661	1640	1616	1591	1573	1555	1533	1510	1495	1480	1441	1400	1351	1316	1263
070	**High**	**5**	W	11 x 10	1	2472	2360	2435	2315	2393	2290	2349	2275	2306	2250	2271	2236	2189	2121	2033	1936
	Med High	**4**	Y1			2271	2248	2225	2205	2184	2166	2147	2129	2110	2094	2078	2039	2011	1977	1930	1846
	Med	3				2133	2115	2096	2072	2047	2030	2013	1996	1979	1965	1950	1909	1873	1837	1793	1748
	Med Low	2				2008	1985	1962	1939	1915	1898	1880	1862	1843	1828	1812	1774	1742	1703	1669	1635
	Low	**1**	G			1806	1784	1761	1742	1722	1696	1669	1656	1642	1625	1607	1564	1527	1490	1443	1404

Factory speed settings are in Bold 12/19/11

Air flow values are with dry coil and standard filter

For wet coil performance first calculate the face velocity of the air coil (Face Velocity [fpm] = Airflow [cfm] / Face Area [sq ft]). Then for velocities of 200 fpm reduce the static capability by 0.03 in. wg, 300 fpm by 0.08 in. wg, 400 fpm by 0.12 in. wg., and 500 fpm by 0.16 in. wg.

Highest setting is for auxiliary heat and lowest setting is for constant fan. The "Y1" and "Y2" settings must be between the "G" and "W" settings. The gray wire is not factory wired to the motor and is tied to the wire harness. This wire can be field connected and can be used with 3ht/2cl thermostats or IntelliZone to deliver the required air flow for the Y2 signal.

About X13 ECM Constant Torque Motors

The X13 is a 'Constant Torque' ECM motor and delivers air flow similar to a PSC but operates as efficiently as an ECM Variable Speed Motor. Because it's an ECM Motor, the X13 can ramp slowly up or down like the ECM Variable Speed Motor. There are 5 possible speed taps available on the X13 motor with #1 being the lowest airflow and #5 being the highest airflow. These speed selections are preset at the time of manufacture and are easily changed in the field if necessary.

If more than one tap are energized at the same time, built in logic gives precedence to the highest tap number and allows air flow to change with G, Y1, Y2 and W signals. Each of those 5 speeds has a specific 'Torque' value programmed into the motor for each speed selection. As static pressure increases, airflow decreases resulting in less torque on the rotor. The motor responds only to changes in torque and adjusts its speed accordingly.

The X13 motor is powered by line voltage but the motor speed is energized by 24VAC.

X13 Benefits:

- High efficiency
- Soft start
- 5 speeds with up to 4 speeds on-line
- Built in logic allows air flow to change with G, Y1, Y2 and W signals
- Super efficient low airflow continuous blower setting (G)

Blower Performance Data cont.

Dual Capacity X13

Model	Motor Speed	Motor Tap	T'stat Cnct.	Blower Size	Motor HP	Airflow (cfm) at External Static Pressure (in. wg)															
						0	**0.05**	**0.10**	**0.15**	**0.20**	**0.25**	**0.30**	**0.35**	**0.40**	**0.45**	**0.50**	**0.60**	**0.70**	**0.80**	**0.90**	**1.00**
026	**High**	**5**	W	9 x 7	1/2	1120	1109	1097	1082	1066	1055	1044	1028	1011	1001	991	932	839	-	-	-
	Med High	**4**	Y2			1020	1006	991	980	968	950	932	922	911	894	876	849	812	-	-	-
	Med	3				917	906	895	884	872	854	836	824	812	792	772	754	719	-	-	-
	Med Low	**2**	Y1			836	824	812	794	776	765	754	735	715	703	691	653	631	-	-	-
	Low	**1**	G			735	721	707	687	666	653	640	622	603	589	574	533	-	-	-	-
038	**High**	**5**	W	11 x 10	1/2	1530	1503	1476	1453	1429	1413	1397	1376	1355	1342	1329	1276	1231	1173	-	-
	Med High	**4**	Y2			1413	1388	1363	1342	1321	1303	1285	1263	1240	1226	1212	1173	1016	946	-	-
	Med	**3**	Y1			1355	1325	1294	1276	1258	1235	1212	1188	1164	1144	1123	982	909	883	-	-
	Med Low	2				1336	1299	1261	1242	1222	1202	1181	1157	1132	1111	1090	937	874	830	-	-
	Low	**1**	G			1243	1182	1121	1061	1000	964	928	856	784	744	703	647	592	-	-	-
049	**High**	**5**	W	11 x 10	1	1934	1910	1886	1871	1855	1827	1799	1780	1760	1747	1734	1700	1659	1617	-	-
	Med High	4				1799	1783	1767	1744	1720	1693	1666	1649	1631	1617	1603	1560	1530	1492	-	-
	Med	**3**	Y2			1694	1680	1666	1642	1617	1592	1567	1552	1537	1519	1500	1453	1421	1372	-	-
	Med Low	**2**	Y1			1575	1560	1540	1520	1502	1487	1471	1448	1424	1409	1393	1351	1308	1266	-	-
	Low	**1**	G			1454	1406	1358	1333	1308	1285	1261	1239	1217	1198	1179	1072	1002	988	-	-
064	**High**	**5**	W	11 x 10	1	2245	2360	2214	2315	2173	2290	2136	2275	2103	2250	2070	2032	1998	1957	1910	1825
	Med High	**4**	Y2			2092	2073	2054	2035	2015	1995	1975	1958	1940	1922	1904	1880	1843	1806	1767	1728
	Med	3				1951	1931	1910	1889	1868	1850	1831	1812	1793	1774	1755	1722	1688	1654	1612	1562
	Med Low	**2**	Y1			1812	1796	1780	1761	1741	1718	1695	1682	1668	1651	1633	1591	1555	1518	1480	1433
	Low	**1**	G			1682	1661	1640	1616	1591	1573	1555	1533	1510	1495	1480	1441	1400	1351	1316	1263
072	**High**	**5**	W	11 x 10	1	2472	2360	2435	2315	2393	2290	2349	2275	2306	2250	2271	2236	2189	2121	2033	1936
	Med High	**4**	Y2			2271	2248	2225	2205	2184	2166	2147	2129	2110	2094	2078	2039	2011	1977	1930	1846
	Med	3				2133	2115	2096	2072	2047	2030	2013	1996	1979	1965	1950	1909	1873	1837	1793	1748
	Med Low	**2**	Y1			2008	1985	1962	1939	1915	1898	1880	1862	1843	1828	1812	1774	1742	1703	1669	1635
	Low	**1**	G			1806	1784	1761	1742	1722	1696	1669	1656	1642	1625	1607	1564	1527	1490	1443	1404

Factory speed settings are in Bold 12/19/11

Air flow values are with dry coil and standard filter

For wet coil performance first calculate the face velocity of the air coil (Face Velocity [fpm] = Airflow [cfm] / Face Area [sq ft]). Then for velocities of 200 fpm reduce the static capability by 0.03 in. wg, 300 fpm by 0.08 in. wg, 400 fpm by 0.12 in.. wg., and 500 fpm by 0.16 in. wg.

Highest setting is for auxiliary heat (W) and lowest setting is for constant blower (G). The "Y1" and "Y2" settings must be between the "G" and "W" settings.

Setting Blower Speed - X13

X13 blower motors have five (5) speeds of which three (3) are selectable on single speed and four (4) are selectable on dual capacity.

CAUTION: Disconnect all power before performing this operation.

X13 ECM Motor Connections - Single Speed

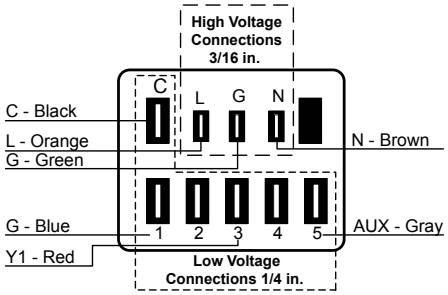

X13 ECM Motor Connections - Dual Capacity

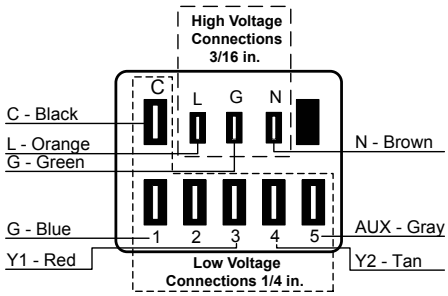

Blower Performance Data cont.

Single Speed ECM2.3 Motor

Model	Max ESP	Air Flow Settings											
		1	2	3	4	5	6	7	8	9	10	11	12
018	0.50	300	400 L	**500**	**600 M**	**700 H**	**800**						
022	0.50		400	500 L	**600 M**	**700**	**800 H**	**900**	1000	1100	1200		
030	0.50		400	500 L	600	**700 M**	**800**	**900 H**	**1000**	**1100**	1200		
036	0.50	650	750	850 L	1000	**1100 M**	**1200**	**1300 H**	**1400**	**1500**			
036 w/1hp*	0.75	800	1000 L	**1100 M**	**1300 H**	**1500**	**1600**	1800					
042	0.50	650	800	900 L	1050	**1150 M**	**1250**	**1350**	**1450 H**	**1550**			
042 w/1hp*	0.75	800	900 L	1000	**1200 M**	**1400 H**	**1600**	**1700**	**1850**	2000	2200	2300	2400
048	0.50	650	800	900	1050 L	1150	**1250**	**1350 M**	**1450**	**1550 H**			
048 w/1hp*	0.75	800	900	1000 L	1200	**1400 M**	**1600 H**	**1700**	**1850**	2000	2200	2300	2400
060	0.75	800	950	1100 L	1300	**1500 M**	**1750**	**1950 H**	**2100**	**2300**			
070	0.75	800	950	1100 L	1300	**1500**	**1750 M**	**1950**	**2100 H**	**2300**			

2/7/12

Dual Capacity ECM2.3 Motor

Model	Max ESP	Air Flow Settings											
		1	2	3	4	5	6	7	8	9	10	11	12
026	0.50		400	500 L	600	**700 M**	**800**	**900 H**	**1000**	1100	1200		
038	0.50	650	750 L	850	1000	**1100 M**	**1200**	**1300 H**	**1400**	**1500**			
038 w/1hp*	0.75	800 L	1000	**1100 M**	**1300 H**	**1500**	**1600**	1800					
049	0.50	650	800 L	900	1050	1150	**1250**	**1350 M**	**1450**	**1550 H**			
049 w/1hp*	0.75	800 L	900	1000	1200	**1400 M**	**1600 H**	**1700**	**1850**	2000	2200	2300	2400
064	0.75	800	950 L	1100	1300	**1500 M**	**1750**	**1950 H**	**2100**	**2300**			
072	0.75	800	950	1100 L	1300	**1500**	**1750 M**	**1950**	**2100 H**	**2300**			

Factory settings are at recommended L-M-H DIP switch locations 1/25/12
M-H settings MUST be located within boldface cfm range
Lowest and Highest air flow settings are assumed to be L and H respectively
Cfm is controlled within 35% up to the maximum ESP
Max ESP includes allowance for wet coil and standard filter

Blower Performance Data cont.

Setting Blower Speed - ECM2.3

The ABC board's Yellow Config LED will flash the current ECM blower speed selections for low, med, and high continuously with a short pause in between. The speeds can also be confirmed with the AID Tool under the Setup/ ECM Setup screen. The ECM 2.3 blower motor speeds can be field adjusted with or without using an AID Tool.

ECM Setup without an AID Tool

The blower speeds for Low (G only), Med (Y1), and High (Y2/Aux) can be adjusted directly at the Aurora ABC board which utilizes the push button (SW1) on the ABC board. This procedure is outlined in the ECM Configuration Mode portion of the Aurora 'Base' Control System section.

ECM Setup with an AID Tool

A much easier method utilizes the AID Tool to change the airflow using the procedure below. First navigate to the Setup screen and then select ECM Setup. This screen displays the current ECM settings. It allows the technician to enter the setup screens to change the ECM settings. Change the highlighted item using the ◄ and ► buttons and then press the ◙ button to select the item.

ECM Setup with an AID Tool cont.

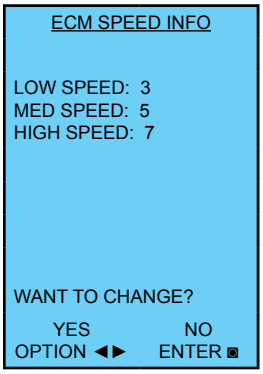

Selecting YES will enter ECM speed setup, while selecting NO will return to the previous screen.

ECM Speed Setup - These screens allow the technician to select the low, medium, and high blower speed for the ECM blower motor. Change the highlighted item using the ▲ and ▼ buttons. Press the ◙ button to select the speed.

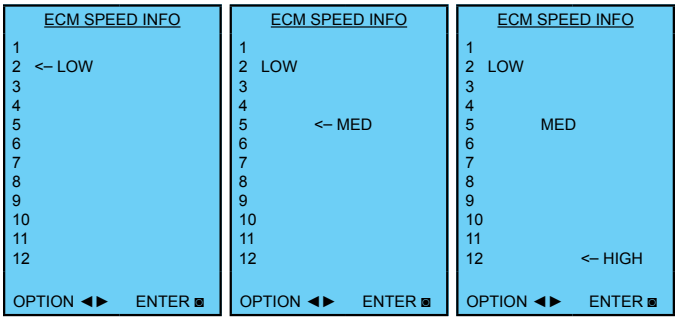

After the high speed setting is selected the AID Tool will automatically transfer back to the ECM Setup screen.

Vertical Dimensional Data

Top Air Discharge

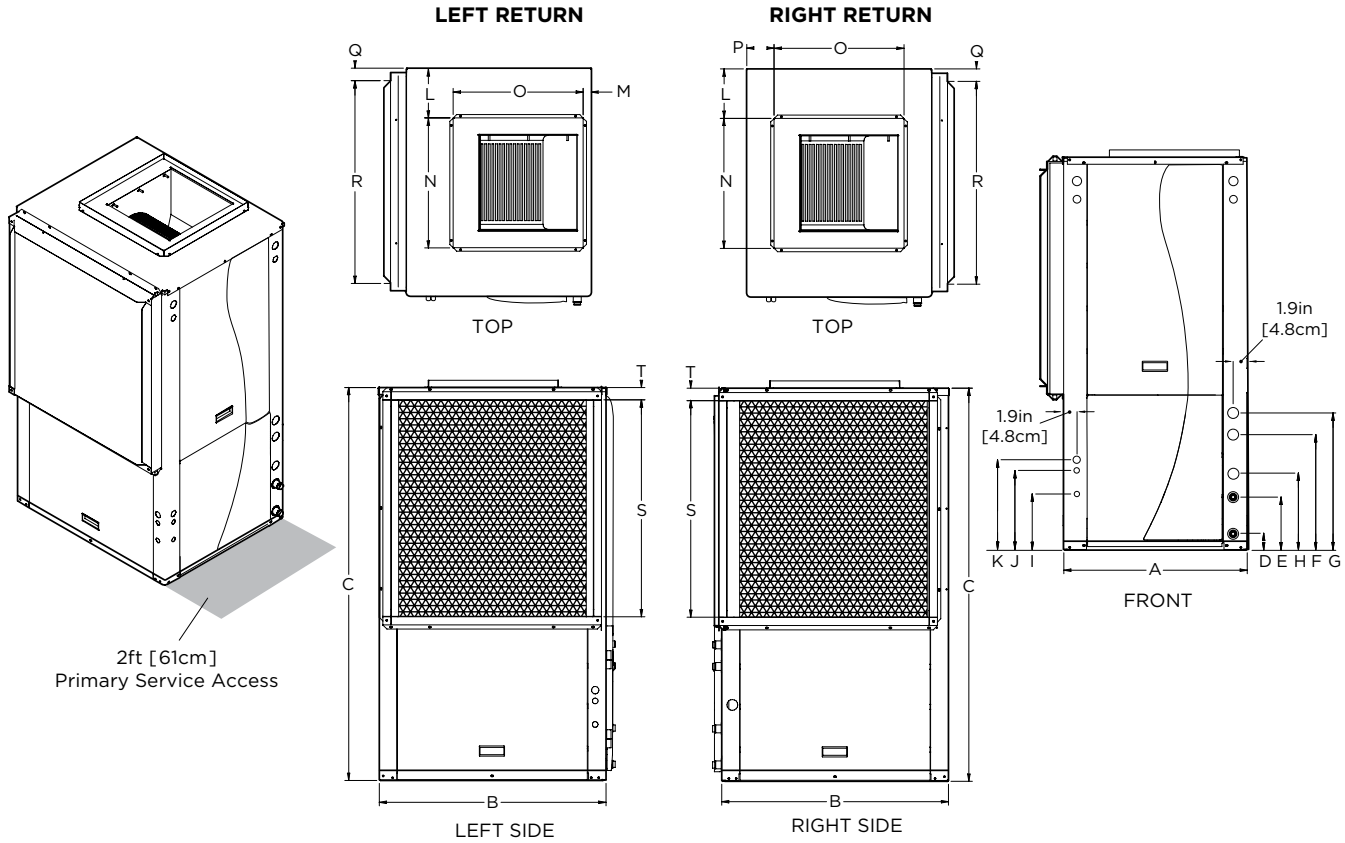

Vertical Top Flow Model		Overall Cabinet			Water Connections							Electrical Connections			Discharge Connection duct flange installed (30.10 in)					Return Connection using std deluxe filter rack (30.10 in)			
		A Width	B Depth	C Height	D Loop In	E Loop Out	F HWG In	G HWG Out	H Cond-ensate	Loop Water FPT	HWG Sweat (I.D.)	I 1/2 in. cond Low Votage	J 1/2 in. cond Ext Pump	K 3/4 in. cond Power Supply	L	M	N Supply Width	O Supply Depth	P	Q	R Return Depth	S Return Height	T
012	in.	22.2	22.5	34.5	2.3	5.3	11.9	14.9	8.6	1 in. Swivel	1/2 in. Female	3.8	9.7	11.7	6.1	3.7	10.0	10.0	0.7	2.4	18.1	14.2	1.7
	cm.	56.4	57.2	87.6	5.9	13.5	30.2	37.8	21.8			9.7	24.6	29.7	15.5	9.4	25.4	25.4	1.8	6.1	46.0	36.1	4.3
018	in.	22.5	26.5	39.4	2.3	5.3	13.4	16.4	9.6	1 in. Swivel	1/2 in. Female	5.1	10.8	12.8	6.3	0.7	14.0	14.0	2.7	2.3	22.0	18.0	2.0
	cm.	57.2	67.3	100.1	5.8	13.5	34.0	41.7	24.4			13.0	27.4	32.5	16.0	1.8	35.6	35.6	6.9	5.8	55.9	45.7	5.1
022-030	in.	22.5	26.5	48.5	2.0	7.0	13.5	16.5	10.2	1 in. Swivel	1/2 in. Female	8.5	10.4	11.8	6.1	0.8	14.0	14.0	4.4	1.7	22.2	26.0	1.7
	cm.	57.2	67.3	123.2	5.1	17.8	34.3	41.9	25.9			21.6	26.4	30.0	15.5	2.0	35.6	35.6	11.2	4.3	56.4	66.0	4.3
036-038	in.	25.6	31.6	50.4	2.3	7.3	15.9	18.9	10.6	1 in. Swivel	1/2 in. Female	8.0	11.3	12.8	6.9	1.1	18.0	18.0	3.8	1.7	28.1	26.0	1.7
	cm.	65.0	80.3	128.0	5.8	18.5	40.4	48.0	26.9			20.3	28.7	32.5	17.5	2.8	45.7	45.7	9.7	4.3	71.4	66.0	4.3
042-049	in.	25.6	31.6	54.4	2.3	7.3	15.9	18.9	10.6	1 in. Swivel	1/2 in. Female	8.0	11.3	12.8	6.9	1.1	18.0	18.0	3.8	1.7	28.1	30.0	1.7
	cm.	65.0	80.3	138.2	5.8	18.5	40.4	48.0	26.9			20.3	28.7	32.5	17.5	2.8	45.7	45.7	9.7	4.3	71.4	76.2	4.3
060-072	in.	25.6	31.6	58.4	2.3	7.3	15.9	18.9	10.6	1 in. Swivel	1/2 in. Female	8.0	11.3	12.8	6.9	1.1	18.0	18.0	3.8	1.7	28.1	34.0	1.7
	cm.	65.0	80.3	148.3	5.8	18.5	40.4	48.0	26.9			20.3	28.7	32.5	17.5	2.8	45.7	45.7	9.7	4.3	71.4	86.4	4.3

Condensate is 3/4 in. PVC female glue socket and is switchable from side to front 2/8/12
Unit shipped with deluxe 2 in. (field adjustable to 1 in.) duct collar/filter rack extending from unit 3.25 in. and is suitable for duct connection.
Discharge flange is field installed and extends 1 in. [25.4mm] from cabinet
Decorative molding and/or water connections extend 1.2 in. [30.5mm] beyond front of cabinet.

Vertical Dimensional Data cont.

Bottom Air Discharge

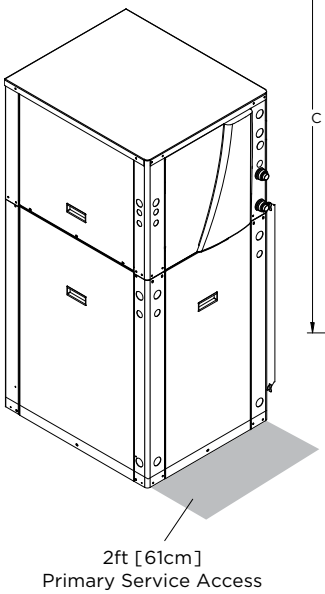

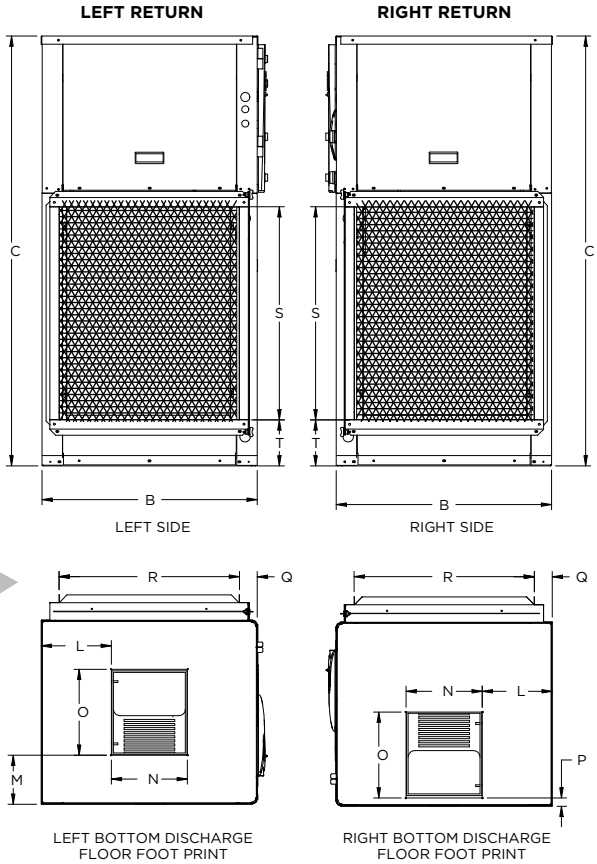

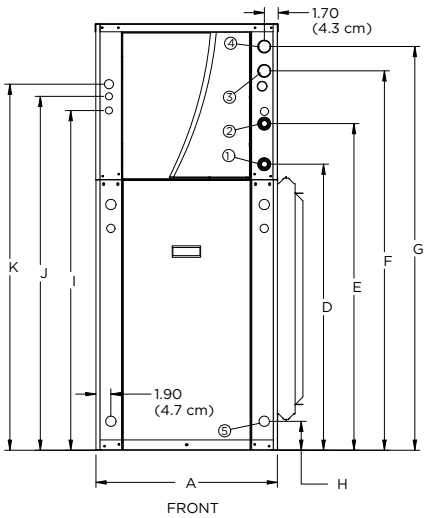

Bottomflow Models		Overall Cabinet			Water Connections							Electrical Knockouts			Discharge Connection duct flange installed (30.10 in)					Return Connection using std deluxe filter rack (30.10 in)			
					1	2	3	4	5			I 1/2 in. cond	J 1/2 in. cond	K 3/4 in. cond									
		A Width	B Depth	C Height	D In	E Out	F HWG In	G HWG Out	H Con-densate	Loop Water FPT	HWG Sweat (I.D.)	Low Voltage	Ext Pump	Power Supply	L	M	N Supply Width	O Supply Depth	P	Q	R Return Depth	S Return Height	T
022-030	in.	22.5	26.5	52.5	35.3	40.2	46.7	49.7	3.6	1 in. Swivel	1/2 in. Female	41.9	43.6	45.1	8.6	6.0	9.3	10.5	1.0	2.2	22.2	26.0	5.6
	cm.	57.2	67.3	133.4	89.7	102.1	118.6	126.2	9.1			106.4	110.7	114.6	21.8	15.2	23.6	26.7	2.5	5.6	56.4	66.0	14.2
036-072	in.	25.5	31.5	62.5	43.4	48.4	57.0	60.0	3.6	1 in. Swivel	1/2 in. Female	48.9	50.8	52.2	9.1	4.8	13.4	13.6	1.5	1.8	28.1	34.0	5.6
	cm.	64.8	80.0	158.8	110.2	122.9	144.8	152.4	9.1			124.2	129.0	132.6	23.1	12.2	34.0	34.5	3.8	4.6	71.4	86.4	14.2

Condensate is 3/4 in. PVC female glue socket and is switchable from side to front.
Unit shipped with deluxe 2 in. (field adjustable to 1 in.) duct collar/filter rack extending from unit 3.25 in. and is suitable for duct connection.
Decorative molding and water connections extend 1.2 in. [30.5 mm] beyond front of cabinet.

11/16/10

Vertical Dimensional Data cont.

Rear Air Discharge

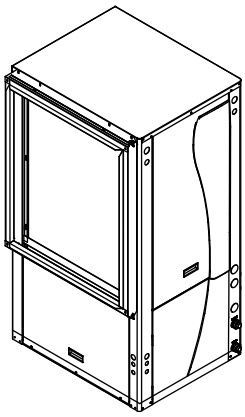

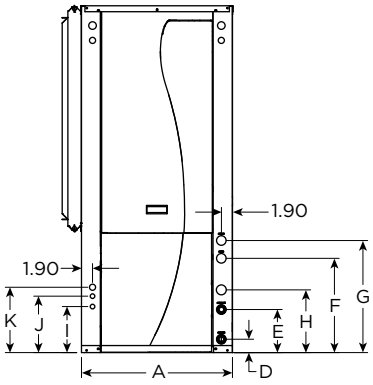

FRONT

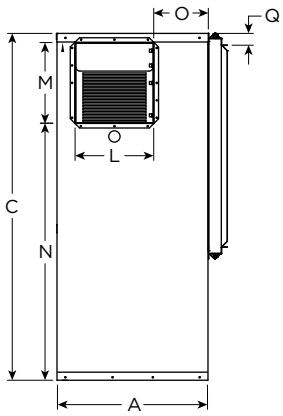

REAR VIEW LEFT RETURN

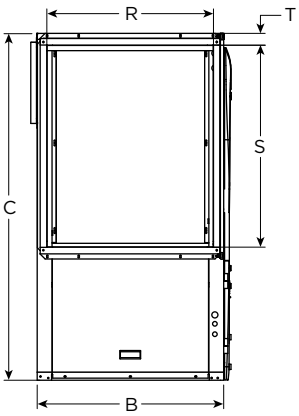

SIDE VIEW LEFT RETURN

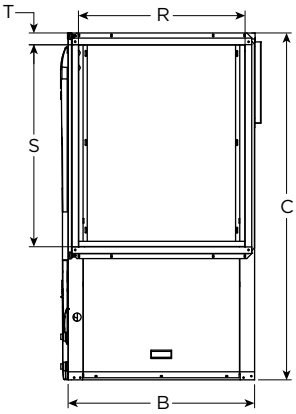

SIDE VIEW RIGHT RETURN

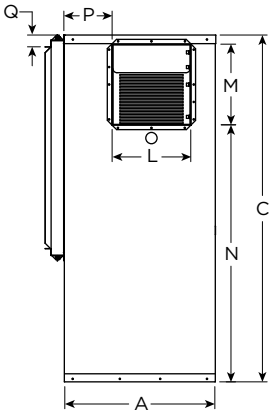

REAR VIEW RIGHT RETURN

Vertical Topflow Model		Overall Cabinet			Water Connections							Electrical Connections			Discharge Connection duct flange installed (30.10 in)					Return Connection using std deluxe filter rack (30.10 in)			
		A Width	B Depth	C Height	D Loop In	E Loop Out	F HWG In	G HWG Out	H Cond-ensate	Loop Water FPT	HWG Sweat (I.D.)	I 1/2 in. cond Low Voltage	J 1/2 in. cond Ext Pump	K 3/4 in. cond Power Supply	L Supply Width	M Supply Depth	N	O	P	Q	R Return Depth	S Return Height	T
042-049	in.	25.6	31.6	54.4	2.3	7.3	15.9	18.9	10.6	1 in. Swivel	1/2 in. Female	8.0	11.3	12.8	13.3	13.6	39.4	9.1	8.1	1.7	28.1	30.0	1.7
	cm.	65.0	80.3	138.2	5.8	18.5	40.4	48.0	26.9			20.3	28.7	32.5	33.8	34.5	100.1	23.1	20.6	4.3	71.4	76.2	4.3
060-072	in.	25.6	31.6	58.4	2.3	7.3	15.9	18.9	10.6	1 in. Swivel	1/2 in. Female	8.0	11.3	12.8	13.3	13.6	43.4	9.1	8.1	1.7	28.1	34.0	1.7
	cm.	65.0	80.3	148.3	5.8	18.5	40.4	48.0	26.9			20.3	28.7	32.5	33.8	34.5	110.2	23.1	20.6	4.3	71.4	86.4	4.3

11/16/10

Condensate is 3/4 in. PVC female glue socket and is switchable from side to front.
Unit shipped with deluxe 2 in. (field adjustable to 1 in.) duct collar/filter rack extending from unit 3.25 in. and is suitable for duct connection.
Discharge flange is field installed and extends 1 in. [25.4 mm] from cabinet.
Decorative molding and water connections extend 1.2 in. [30.5 mm] beyond front of cabinet.

Horizontal Dimensional Data

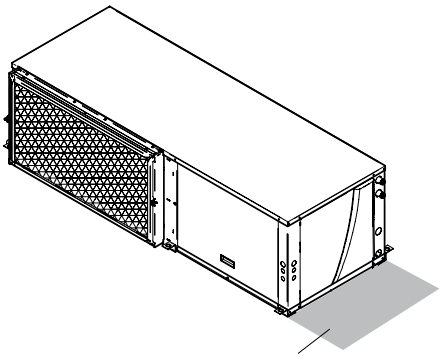

TOP VIEW

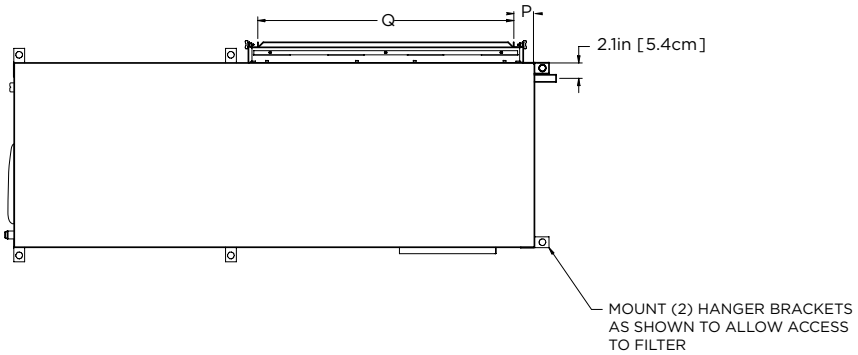

FRONT VIEW

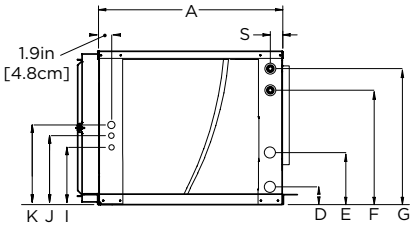

SIDE DISHCARGE VIEW

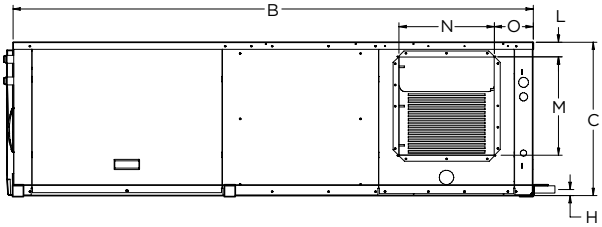

END VIEW

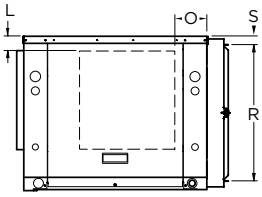

AS SHOWN LR UNIT (RR UNIT ON OPPOSITE SIDE—SAME DIMENSIONS)

Horizontal Model		Overall Cabinet			Water Connections							Electrical Connections			Discharge Connection duct flange installed (30.10 in)				Return Connection using std deluxe filter rack (30.10 in)			
		A Width	B Depth	C Height	D In	E Out	F HWG In	G HWG Out	H Cond-ensate	Loop Water FPT	HWG Sweat (I.D.)	I 1/2 in. cond Low Votage	J 1/2 in. cond Ext Pump	K 3/4 in. cond Power Supply	L	M Supply Height	N Supply Depth	O	P	Q Return Depth	R Return Height	S
012	in.	22.5	44.0	17.3	2.3	5.3	11.9	14.9	8.0	1 in. Swivel	1/2 in. Female	3.8	9.7	11.7	4.1	7.3	9.7	5.8	1.7	17.8	14.6	1.4
	cm.	57.2	111.8	43.9	5.8	13.5	30.2	37.8	20.3			9.7	24.6	29.7	10.4	18.5	24.6	14.7	4.3	45.2	37.1	3.6
018	in.	22.5	53.0	19.3	2.3	5.3	13.8	16.8	8.0	1 in. Swivel	1/2 in. Female	5.9	11.6	13.6	1.8	10.5	9.5	8.2	2.2	21.8	16.5	1.5
	cm.	57.2	134.6	49.0	5.8	13.5	35.1	42.7	20.3			15.0	29.5	34.5	4.6	26.7	24.1	20.8	5.6	55.4	41.9	3.8
022-030	in.	22.5	63.0	19.3	2.0	7.0	13.5	16.5	0.8	1 in. Swivel	1/2 in. Female	8.8	9.4	11.8	2.3	10.5	9.4	5.8	2.8	30.5	16.9	1.3
	cm.	57.2	160.0	49.0	5.1	17.8	34.3	41.9	2.0			22.4	23.9	30.0	5.8	26.7	23.9	14.7	7.1	77.5	42.9	3.3
036-038	in.	25.6	72.0	21.3	2.3	7.3	15.9	18.9	0.8	1 in. Swivel	1/2 in. Female	8.8	9.4	11.8	SEE CHART	13.6	13.2	SEE CHART	2.8	35.5	18.9	1.3
	cm.	65.0	182.9	54.1	5.8	18.5	40.4	48.0	2.0			22.4	23.9	30.0		34.5	33.5		7.1	90.2	48.0	3.3
042-049	in.	25.6	77.0	21.3	2.3	7.3	15.9	18.9	0.8	1 in. Swivel	1/2 in. Female	8.8	9.4	11.8	SEE CHART	13.6	13.2	SEE CHART	2.8	40.4	18.9	1.3
	cm.	65.0	195.6	54.1	5.8	18.5	40.4	48.0	2.0			22.4	23.9	30.0		34.5	33.5		7.1	102.6	48.0	3.3
060-072	in.	25.6	82.0	21.3	2.3	7.3	15.9	18.9	0.8	1 in. Swivel	1/2 in. Female	8.8	9.4	11.8	SEE CHART	13.6	13.2	SEE CHART	2.8	45.4	18.9	1.3
	cm.	65.0	208.3	54.1	5.8	18.5	40.4	48.0	2.0			22.4	23.9	30.0		34.5	33.5		7.1	115.3	48.0	3.3

Condensate is 3/4 in. PVC female glue socket and is switchable from side to front 2/8/12
Unit shipped with deluxe 2 in. (field adjustable to 1 in.) duct collar/filter rack extending from unit 3.25 in. and is suitable for duct connection.
Discharge flange is field installed and extends 1 in. [25.4mm] from cabinet
Decorative molding and/or water connections extend 1.2 in. [30.5mm] beyond front of cabinet.

Units Not Shown Above		L	O
Right Return End Discharge	in	2.8	4.6
	cm	7.1	11.8
Right Return Side Discharge	in	4.9	6.9
	cm	12.4	17.5
Left Return End Discharge	in	4.9	7.6
	cm	12.4	19.4
Left Return Side Discharge	in	2.8	6.9
	cm	7.1	17.5

Physical Data

Single Speed

Model		Single Speed								
		012	018	022	030	036	042	048	060	070
Compressor (1 each)		Rotary		Scroll						
Factory Charge R-410A, oz [kg]	Vertical	42 [1.19]	40 [1.13]	62 [1.76]	80 [2.26]	84 [2.38]	92 [2.60]	100 [2.83]	120 [3.40]	150 [4.25]
Factory Charge R-410A, oz [kg]	Horizontal	42 [1.19]	40 [1.13]	60 [1.70]	80 [2.26]	84 [2.38]	92 [2.60]	100 [2.83]	120 [3.40]	122 [3.46]
Blower Motor and Blower										
Blower Motor Type/Speeds	ECM2.3	n/a	ECM Variable Speed							
	X13	n/a	n/a	X13 - 5 Speeds						
	PSC	PSC - 4 Speeds	PSC - 3 Speeds							
Blower Motor - hp [W]	ECM2.3	n/a	1/2 [373]	1/2 [373]	1/2 [373]	1/2 [373]	1/2 [373]	1/2 [373]	1 [746]	1 [746]
	X13	n/a	n/a	1/2 [373]	1/2 [373]	1/2 [373]	1 [746]	1 [746]	1 [746]	1 [746]
	PSC	1/10 [75]	1/6 [134]	1/5 [149]	1/3 [249]	1/2 [373]	1/2 [373]	1/2 [373]	1 [746]	1 [746]
Oversized Blower Motor - hp [W]	ECM	n/a	n/a	n/a	n/a	1 [746]	1 [746]	1 [746]	n/a	n/a
	PSC	n/a	n/a	1/3 [249]	1/3 [249]	1/2 [373]	3/4 [560]	3/4 [560]	n/a	n/a
Blower Wheel Size (Dia x W), in. [mm]	ECM2.3 & X13	n/a	9 x 7 [229 x 178]	9 x 7 [229 x 178]	9 x 7 [229 x 178]	11 x 10 [279 x 254]	11 x 10 [279 x 254]	11 x 10 [279 x 254]	11 x 10 [279 x 254]	11 x 10 [279 x 254]
	PSC	6 x 8 [152 x 203]	9 x 7 [229 x 178]	9 x 7 [229 x 178]	9 x 7 [229 x 178]	10 x 10 [254 x 254]	10 x 10 [254 x 254]	10 x 10 [254 x 254]	11 x 10 [279 x 254]	11 x 10 [279 x 254]
Oversized Blower Wheel Size (Dia x W), in. [mm]	ECM2.3	n/a	n/a	n/a	n/a	11 x 10 [279 x 254]	11 x 10 [279 x 254]	11 x 10 [279 x 254]	n/a	n/a
	PSC	n/a	n/a	9 x 7 [229 x 178]	9 x 7 [229 x 178]	10 x 10 [254 x 254]	10 x 10 [254 x 254]	10 x 10 [254 x 254]	n/a	n/a
Coax and Water Piping										
Water Connections Size - Swivel - in. [mm]		1 [25.4]	1 [25.4]	1 [25.4]	1 [25.4]	1 [25.4]	1 [25.4]	1 [25.4]	1 [25.4]	1 [25.4]
Hot Water Generator Connection Size - Female Sweat I.D. - in. [mm]		n/a	1/2 [12.7]	1/2 [12.7]	1/2 [12.7]	1/2 [12.7]	1/2 [12.7]	1/2 [12.7]	1/2 [12.7]	1/2 [12.7]
Coax and Piping Water Volume - gal [L]		0.35 [1.3]	0.40 [1.5]	0.7 [2.6]	1.0 [3.8]	1.3 [4.9]	1.3 [4.9]	1.6 [6.1]	1.6 [6.1]	2.3 [8.7]
Vertical										
Air Coil Dimensions (H x W), in. [mm]		16 x 16 [406 x 406]	19 x 20 [483 x 508]	24 x 20 [610 x 542]	28 x 20 [711 x 542]	28 x 25 [711 x 635]	32 x 25 [813 x 635]	32 x 25 [813 x 635]	36 x 25 [914 x 635]	36 x 25 [914 x 635]
Air Coil Total Face Area, ft^2 [m^2]		1.8 [0.167]	2.6 [0.242]	3.3 [0.310]	3.9 [0.362]	4.9 [0.451]	5.6 [0.570]	5.6 [0.570]	6.3 [0.641]	6.3 [0.641]
Air Coil Tube Size, in. [mm]		3/8 [9.5]	5/16 [7.9]	3/8 [9.5]	3/8 [9.5]	3/8 [9.5]	3/8 [9.5]	3/8 [9.5]	3/8 [9.5]	3/8 [9.5]
Air Coil Number of Rows		3	3	3	3	3	3	3	4	4
Filter Standard - 2 in. [51 mm] Pleated MERV 11 Throwaway, in. [mm]		16 x 20 [406 x 508]	20 x 24 [508 x 610]	28 x 24 [712 x 610]	28 x 24 [712 x 610]	28 x 30 [712 x 762]	32 x 30 [813 x 762]	32 x 30 [813 x 762]	36 x 30 [914 x 762]	36 x 30 [914 x 762]
Weight - Operating, lb [kg]		165 [75]	200 [91]	293 [133]	308 [140]	353 [160]	368 [167]	408 [185]	443 [201]	468 [212]
Weight - Packaged, lb [kg]		185 [84]	220 [100]	313 [142]	328 [149]	373 [169]	388 [176]	428 [194]	463 [210]	488 [221]
Horizontal										
Air Coil Dimensions (H x W), in. [mm]		16 x 16 [406 x 406]	18 x 21 [457 x 533]	18 x 27 [457 x 686]	18 x 30 [457 x 762]	20 x 35 [508 x 889]	20 x 40 [508 x 1016]	20 x 40 [508 x 1016]	20 x 45 [508 x 1143]	20 x 45 [508 x 1143]
Air Coil Total Face, ft^2 [m^2]		1.8 [0.167]	2.6 [0.242]	3.4 [0.316]	3.9 [0.362]	4.9 [0.451]	5.6 [0.570]	5.6 [0.570]	6.3 [0.641]	6.3 [0.641]
Air Coil Tube Size, in. [mm]		3/8 [9.5]	5/16 [7.9]	3/8 [9.5]	3/8 [9.5]	3/8 [9.5]	3/8 [9.5]	3/8 [9.5]	3/8 [9.5]	3/8 [9.5]
Air Coil Number of Rows		3	3	3	3	3	3	3	3	3
Filter Standard - 2 in. [51 mm] Pleated MERV 11 Throwaway, in. [mm]		1 - 16 x 20 [406 x 508]	1 - 18 x 24 [457 x 610]	1 - 18 x 32 [457 x 813]	1 - 18 x 32 [457 x 813]	1 - 20 x 37 [686 x 940]	1 - 20 x 20 [508 x 508] 1 - 20 x 22 [508 x 559]	1 - 20 x 20 [508 x 508] 1 - 20 x 22 [508 x 559]	1 - 20 x 25 [508 x 635] 1 - 20 x 22 [508 x 559]	1 - 20 x 25 [508 x 635] 1 - 20 x 22 [508 x 559]
Weight - Operating, lb [kg]		165 [75]	200 [91]	300 [136]	315 [143]	368 [167]	403 [183]	418 [190]	453 [205]	478 [217]
Weight - Packaged, lb [kg]		185 [84]	220 [100]	320 [145]	335 [152]	388 [176]	423 [192]	438 [199]	473 [215]	498 [226]

2/29/12

Physical Data cont.

Dual Capacity

Model		Dual Capacity				
		026	038	049	064	072
Compressor (1 each)		Copeland UltraTech, Dual Capacity Scroll				
Factory Charge R-410A, oz [kg]	Vertical	60 [1.70]	82 [2.32]	93 [2.63]	128 [3.63]	138 [3.91]
Factory Charge R-410A, oz [kg]	Horizontal	60 [1.70]	82 [2.32]	93 [2.63]	128 [3.63]	138 [3.91]
Blower Motor and Blower						
Blower Motor Type/Speeds	ECM2.3	ECM Variable Speed				
	X13	X13 - 5 Speeds				
Blower Motor- hp [W]	ECM2.3	1/2 [373]	1/2 [373]	1/2 [373]	1 [746]	1 [746]
	X13	1/2 [373]	1/2 [373]	1 [746]	1 [746]	1 [746]
Oversized Blower Motor - hp [W]	ECM2.3	n/a	1 [746]	1 [746]	n/a	n/a
Blower Wheel Size (Dia x W), in. [mm]	ECM2.3	9 x 7 [229 x 178]	11 x 10 [279 x 254]	11 x 10 [279 x 254]	11 x 10 [279 x 254]	11 x 10 [279 x 254]
	X13	9 x 7 [229 x 178]	11 x 10 [279 x 254]	11 x 10 [279 x 254]	11 x 10 [279 x 254]	11 x 10 [279 x 254]
Oversized Blower Wheel Size - [Dia. x W], in. [mm]	ECM2.3	n/a	11 x 10 [279 x 254]	11 x 10 [279 x 254]	n/a	n/a
Coax and Water Piping						
Water Connections Size - Swivel - in. [mm]		1 [25.4]	1 [25.4]	1 [25.4]	1 [25.4]	1 [25.4]
HWG Connection Size - Female Sweat I.D. - in. [mm]		1/2 [12.7]	1/2 [12.7]	1/2 [12.7]	1/2 [12.7]	1/2 [12.7]
Coax and Piping Water Volume - gal [l]		0.7 [2.6]	1.3 [4.9]	1.6 [6.1]	1.6 [6.1]	2.3 [8.7]
Vertical						
Air Coil Dimensions (H x W), in. [mm]		24 x 20 [610 x 542]	28 x 25 [711 x 635]	32 x 25 [813 x 635]	36 x 25 [914 x 635]	36 x 25 [914 x 635]
Air Coil Total Face Area, ft^2 [m^2]		3.3 [0.310]	4.9 [0.451]	5.6 [0.570]	6.3 [0.641]	6.3 [0.641]
Air Coil Tube Size, in. [mm]		3/8 [9.5]	3/8 [9.5]	3/8 [9.5]	3/8 [9.5]	3/8 [9.5]
Air Coil Number of Rows		3	3	3	4	4
Filter Standard - 2 in. [51 mm] Pleated MERV 11 Throwaway, in. [mm]		28 x 24 [712 x 610]	28 x 30 [712 x 762]	32 x 30 [813 x 762]	36 x 30 [914 x 762]	36 x 30 [914 x 762]
Weight - Operating, lb [kg]		293 [133]	358 [162]	408 [185]	453 [205]	468 [212]
Weight - Packaged, lb [kg]		313 [142]	378 [172]	428 [194]	473 [215]	488 [221]
Horizontal						
Air Coil Dimensions (H x W), in. [mm]		18 x 27 [457 x 686]	20 x 35 [508 x 889]	20 x 40 [508 x 1016]	20 x 45 [508 x 1143]	20 x 45 [508 x 1143]
Air Coil Total Face Area, ft^2 [m^2]		3.4 [0.316]	4.9 [0.451]	5.6 [0.570]	6.3 [0.641]	6.3 [0.641]
Air Coil Tube Size, in. [mm]		3/8 [9.5]	3/8 [9.5]	3/8 [9.5]	3/8 [9.5]	3/8 [9.5]
Air Coil Number of Rows		3	3	3	4	4
Filter Standard - 2 in. [51 mm] Pleated MERV 11 Throwaway, in [mm]		1 - 18 x 32 [457 x 813]	1 - 20 x 37 [686 x 940]	1 - 20 x 20 [508 x 508] 1 - 20 x 22 [508 x 559]	1 - 20 x 25 [508 x 635] 1 - 20 x 22 [508 x 559]	1 - 20 x 25 [508 x 635] 1 - 20 x 22 [508 x 559]
Weight - Operating, lb [kg]		300 [136]	368 [167]	418 [190]	463 [210]	480 [218]
Weight - Packaged, lb [kg]		320 [145]	388 [176]	438 [199]	483 [219]	500 [227]

2/29/12

Wiring Schematics

Aurora Base with PSC

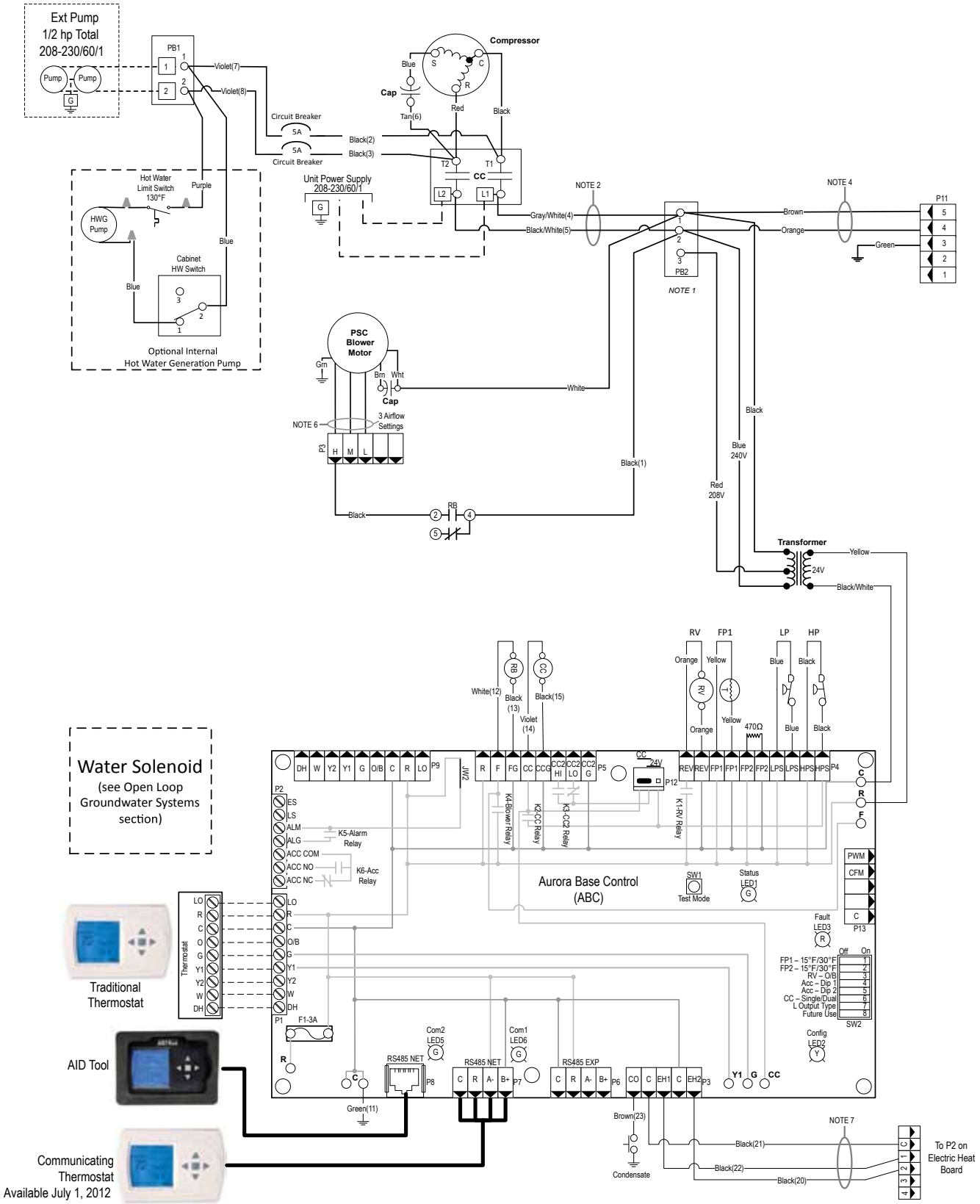

Wiring Schematics cont.

Aurora Base with PSC cont.

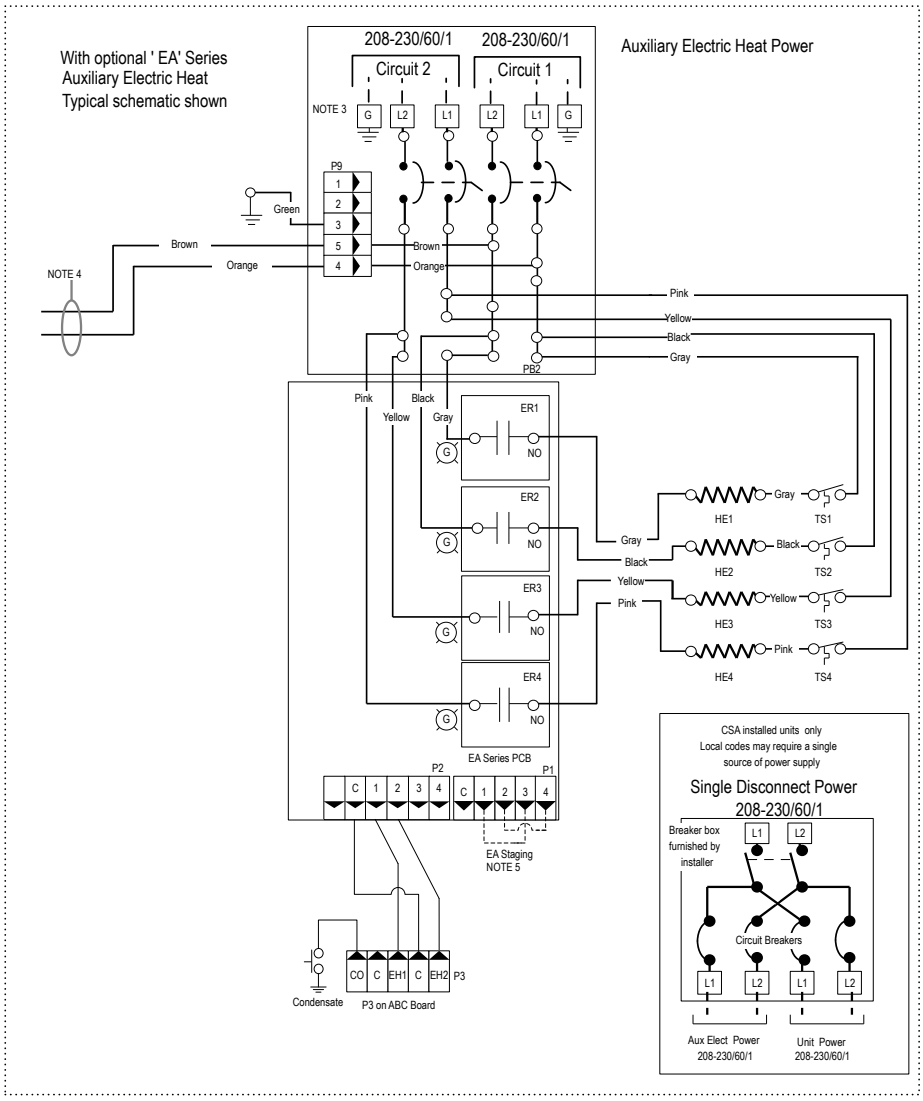

Legend

- Factory Low voltage wiring
- Factory Line voltage wiring
- Field low voltage wiring
- Field line voltage wiring
- Optional block
- DC Voltage PCB traces
- Junction
- Quick connect terminal
- Wire nut
- Field wire lug
- Ground
- Relay Contacts- N.O., N.C.
- Fuse/Breaker
- Thermistor
- Light emitting diode - Green
- Relay coil
- Capacitor w/ bleed resistor
- Switch - Condensate overflow
- Switch - High pressure
- Switch - Low pressure
- Polarized connector

CC / CC2-	Compressor Contactor	PB1, PB2 -	Power blocks
CO -	Condensate overflow sensor	PS -	Power strip
CR1 -	Hot water generator pump relay	RV -	Reversing Valve coil
CR2-	Loop pump relay	SW2 -	DIP package 8 position
CR3 -	PSC Blower Speed Relay	TS -	Thermal limit switch
CR4 -	PSC Blower Power Relay	HWL -	Hot water limit sensor
CS -	Compressor Solenoid	SC -	Start Contactor
F1 and F2 -	Fuses	SR -	Start Relay
HE -	Heater element	FP1 -	Water Coil Limit Sensor
HP -	High pressure switch		
ER1 to ER4 -	Aux heat stage relays		
LP -	Low pressure switch		

Notes

1 - Switch blue and red wires for 208V operation.
2 - The blk/wh and gray/wh wires are removed when Aux Heat is installed
3 - Use manufacturer's part number 19P592-01 (jumper bar assembly) when single source power is required.
4 - When connected the Auxiliary Heat powers blower and controls. Wires are secured at blower.
5 - For additional Auxiliary Heat staging place jumpers as shown.
6 - Refer to BLOWER SPEED table for factory settings.
7 - Wires provided for Auxiliary Heat low voltage control. Wires are secured at blower.

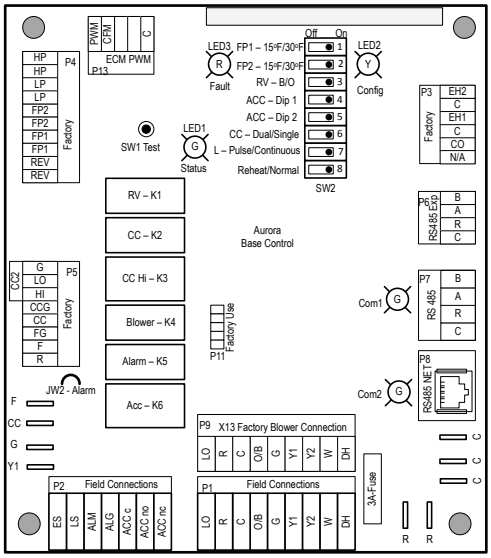

Aurora LED Flash Codes

Slow Flash	1 second ON and 1 second OFF
Fast Flash	250 milliseconds ON and 250 milliseconds OFF
Flash Code	250 milliseconds ON and 250 milliseconds OFF with a 10 second pause before repeating

Random Start Delay (Alternating Colors)		Configuration LED (LED2, Yellow)	
Status LED (LED1, Green)	Fast Flash	No Software Override	OFF
Configuration LED (LED2, Yellow)	Fast Flash	DIP Switch Override	Slow Flash
Fault LED (LED3, Red)	Fast Flash		

Fault LED (LED3, Red)		Status LED (LED1, Green)	
Normal Mode	OFF	Normal Mode	ON
Input Fault Lockout	Flash Code 1	Control is Non-functional	OFF
High Pressure Lockout	Flash Code 2	Test Mode	Slow Flash
Low Pressure Lockout	Flash Code 3	Lockout Active	Fast Flash
Future Use	Flash Code 4	Dehumidification Mode	Flash Code 2
Low Water Coil Limit Lockout - FP1	Flash Code 5	Future Use	Flash Code 3
Reserved	Flash Code 6	Future Use	Flash Code 4
Condensate Overflow Lockout	Flash Code 7	Load Shed	Flash Code 5
Over/Under Voltage Shutdown	Flash Code 8	ESD	Flash Code 6
Future Use	Flash Code 9	Future Use	Flash Code 7
Future Use	Flash Code 10		
Freeze Protection Sensor Error	Flash Code 11		

Aurora Timing Events

Event	Normal Mode	Test Mode
Random Start Delay	5 to 80 seconds	1 second
Compressor On Delay	5 seconds	< 1 second
Compressor Minimum On Time	2 minutes	5 seconds
Compressor Short Cycle Delay	4 minutes	15 seconds
Blower Off Delay	30 seconds	2 seconds
Fault Recognition Delay - High Pressure	Less than 1 second	Less than 1 second
Startup Bypass - Low Pressure	2 minutes	30 seconds
Fault Recognition Delay - Low Pressure	30 seconds	30 seconds
Startup Bypass - Low Water Coil Limit	2 minutes	30 seconds
Fault Recognition Delay - Low Water Coil Limit	30 seconds	30 seconds
Fault Recognition Delay - Condensate Overflow	30 seconds	30 seconds
Thermostat Call Recognition Time	2 seconds	2 seconds
Auxiliary Heat Staging Delay	5 minutes	20 seconds
Emergency Heat Staging Delay	2 minutes	7.5 seconds
Water Valve Slow Opening	90 seconds	90 seconds

Factory Set Blower Speed

Model	Standard PSC
22	M
30	M
36	M
42	M
48	M
60	M
70	M
M	M
Model	**High Static PSC**
22	M
30	M
36	M
42	M
48	M

97P840-05 02/09/12

Wiring Schematics cont.

Aurora Base with PSC and IntelliStart

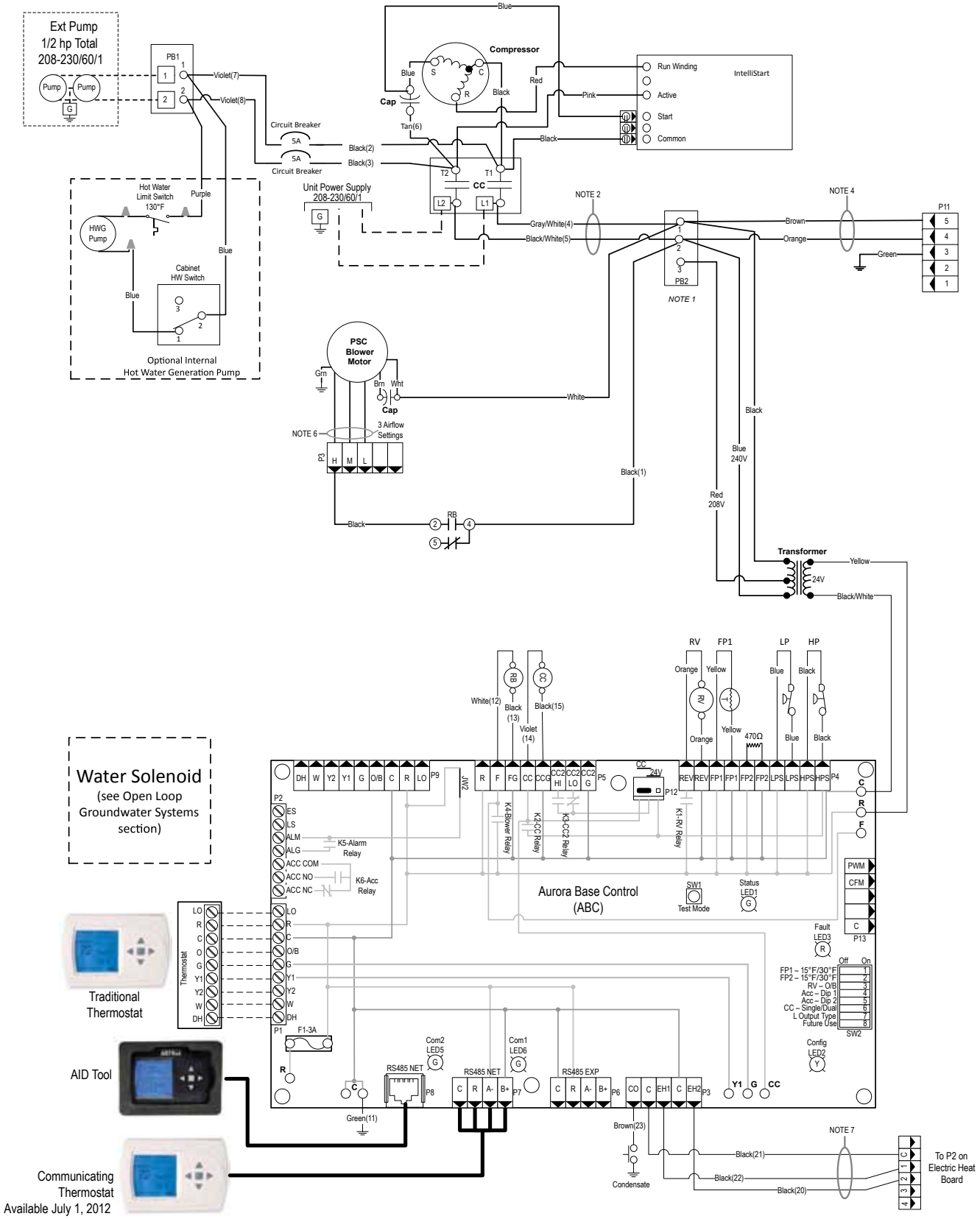

Wiring Schematics cont.

Aurora Base with PSC and IntelliStart cont.

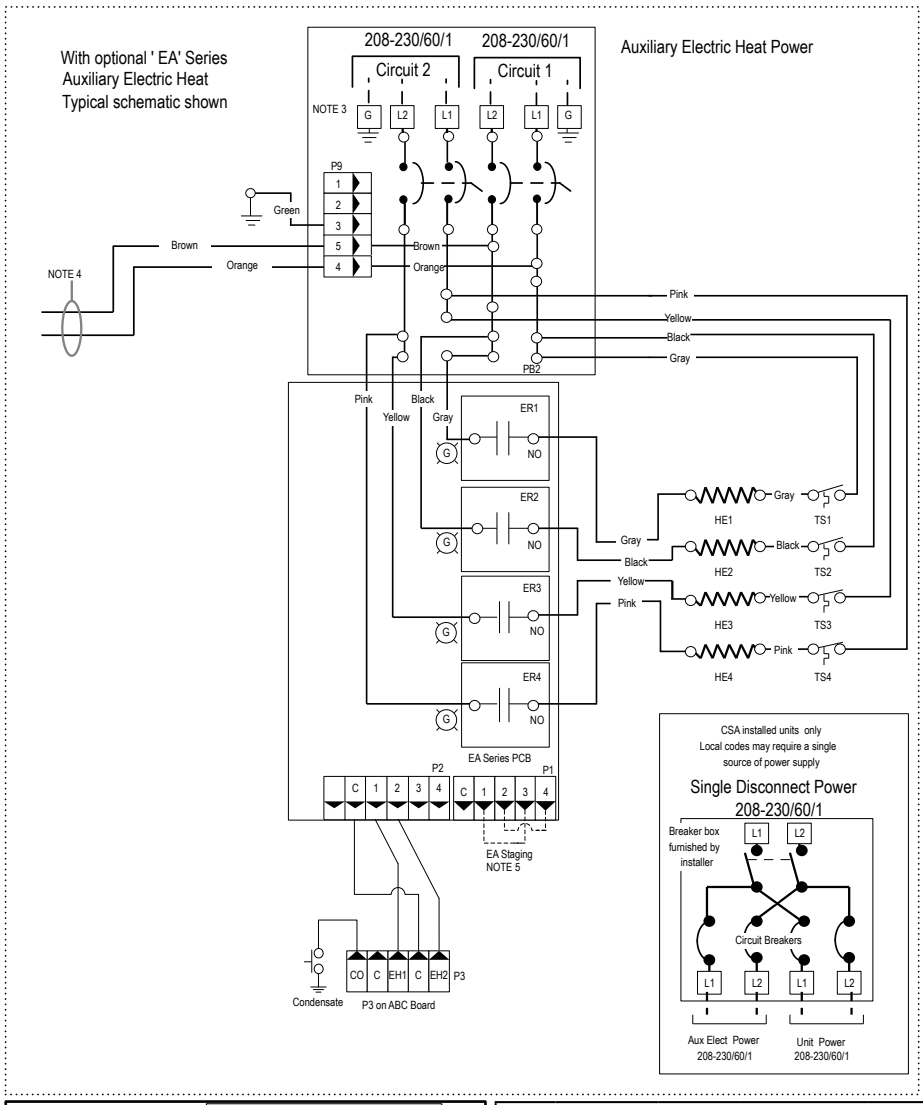

Legend

- Factory Low voltage wiring
- Factory Line voltage wiring
- Field low voltage wiring
- Field line voltage wiring
- Optional block
- DC Voltage PCB traces
- Junction
- Quick connect terminal
- Wire nut
- Field wire lug
- Ground
- Relay Contacts- N.O., N.C.
- Fuse/Breaker
- Thermistor
- Light emitting diode - Green
- Relay coil
- Capacitor w/ bleed resistor
- Switch - Condensate overflow
- Switch - High pressure
- Switch - Low pressure
- Polarized connector

CC / CC2-	Compressor Contactor	PB1, PB2 -	Power blocks
CO -	Condensate overflow sensor	PS -	Power strip
CR1 -	Hot water generator pump relay	RV -	Reversing Valve coil
CR2-	Loop pump relay	SW2 -	DIP package 8 position
CR3 -	PSC Blower Speed Relay	TS -	Thermal limit switch
CR4 -	PSC Blower Power Relay	HWL -	Hot water limit sensor
CS -	Compressor Solenoid	SC -	Start Contactor
F1 and F2 -	Fuses	SR -	Start Relay
HE -	Heater element	FP1 -	Water Coil Limit Sensor
HP -	High pressure switch		
ER1 to ER4 -	Aux heat stage relays		
LP -	Low pressure switch		

Notes

1 - Switch blue and red wires for 208V operation.
2 - The blk/wh and gray/wh wires are removed when Aux Heat is installed
3 - Use manufacturer's part number 19P592-01 (jumper bar assembly) when single source power is required.
4 - When connected the Auxiliary Heat powers blower and controls. Wires are secured at blower.
5 - For additional Auxiliary Heat staging place jumpers as shown.
6 - Refer to BLOWER SPEED table for factory settings.
7 - Wires provided for Auxiliary Heat low voltage control. Wires are secured at blower.

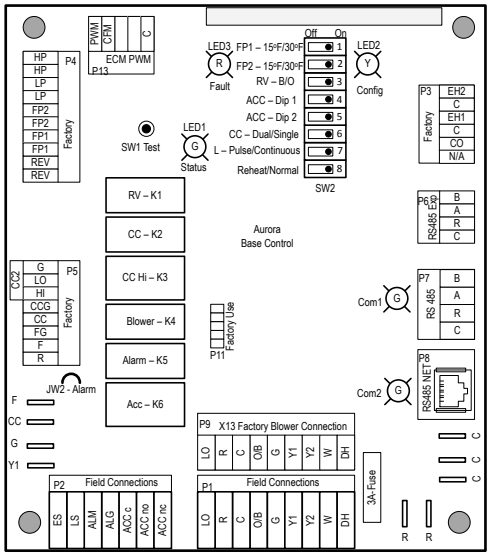

Aurora LED Flash Codes			
Slow Flash	1 second ON and 1 second OFF		
Fast Flash	250 milliseconds ON and 250 milliseconds OFF		
Flash Code	250 milliseconds ON and 250 milliseconds OFF with a 10 second pause before repeating		
Random Start Delay (Alternating Colors)		**Configuration LED (LED2, Yellow)**	
Status LED (LED1, Green)	Fast Flash	No Software Override	OFF
Configuration LED (LED2, Yellow)	Fast Flash	DIP Switch Override	Slow Flash
Fault LED (LED3, Red)	Fast Flash		
Fault LED (LED3, Red)		**Status LED (LED1, Green)**	
Normal Mode	OFF	Normal Mode	ON
Input Fault Lockout	Flash Code 1	Control is Non-functional	OFF
High Pressure Lockout	Flash Code 2	Test Mode	Slow Flash
Low Pressure Lockout	Flash Code 3	Lockout Active	Fast Flash
Future Use	Flash Code 4	Dehumidification Mode	Flash Code 2
Low Water Coil Limit Lockout - FP1	Flash Code 5	Future Use	Flash Code 3
Reserved	Flash Code 6	Future Use	Flash Code 4
Condensate Overflow Lockout	Flash Code 7	Load Shed	Flash Code 5
Over/Under Voltage Shutdown	Flash Code 8	ESD	Flash Code 6
Future Use	Flash Code 9	Future Use	Flash Code 7
Future Use	Flash Code 10		
Freeze Protection Sensor Error	Flash Code 11		

Aurora Timing Events		
Event	**Normal Mode**	**Test Mode**
Random Start Delay	5 to 80 seconds	1 second
Compressor On Delay	5 seconds	< 1 second
Compressor Minimum On Time	2 minutes	5 seconds
Compressor Short Cycle Delay	4 minutes	15 seconds
Blower Off Delay	30 seconds	2 seconds
Fault Recognition Delay - High Pressure	Less than 1 second	Less than 1 second
Startup Bypass - Low Pressure	2 minutes	30 seconds
Fault Recognition Delay - Low Pressure	30 seconds	30 seconds
Startup Bypass - Low Water Coil Limit	2 minutes	30 seconds
Fault Recognition Delay - Low Water Coil Limit	30 seconds	30 seconds
Fault Recognition Delay - Condensate Overflow	30 seconds	30 seconds
Thermostat Call Recognition Time	2 seconds	2 seconds
Auxiliary Heat Staging Delay	5 minutes	20 seconds
Emergency Heat Staging Delay	2 minutes	7.5 seconds
Water Valve Slow Opening	90 seconds	90 seconds

Factory Set Blower Speed	
Model	**Standard PSC**
22	M
30	M
36	M
42	M
48	M
60	M
70	M
M	M
Model	**High Static PSC**
22	M
30	M
36	M
42	M
48	M

Wiring Schematics cont.

Aurora Base with X13

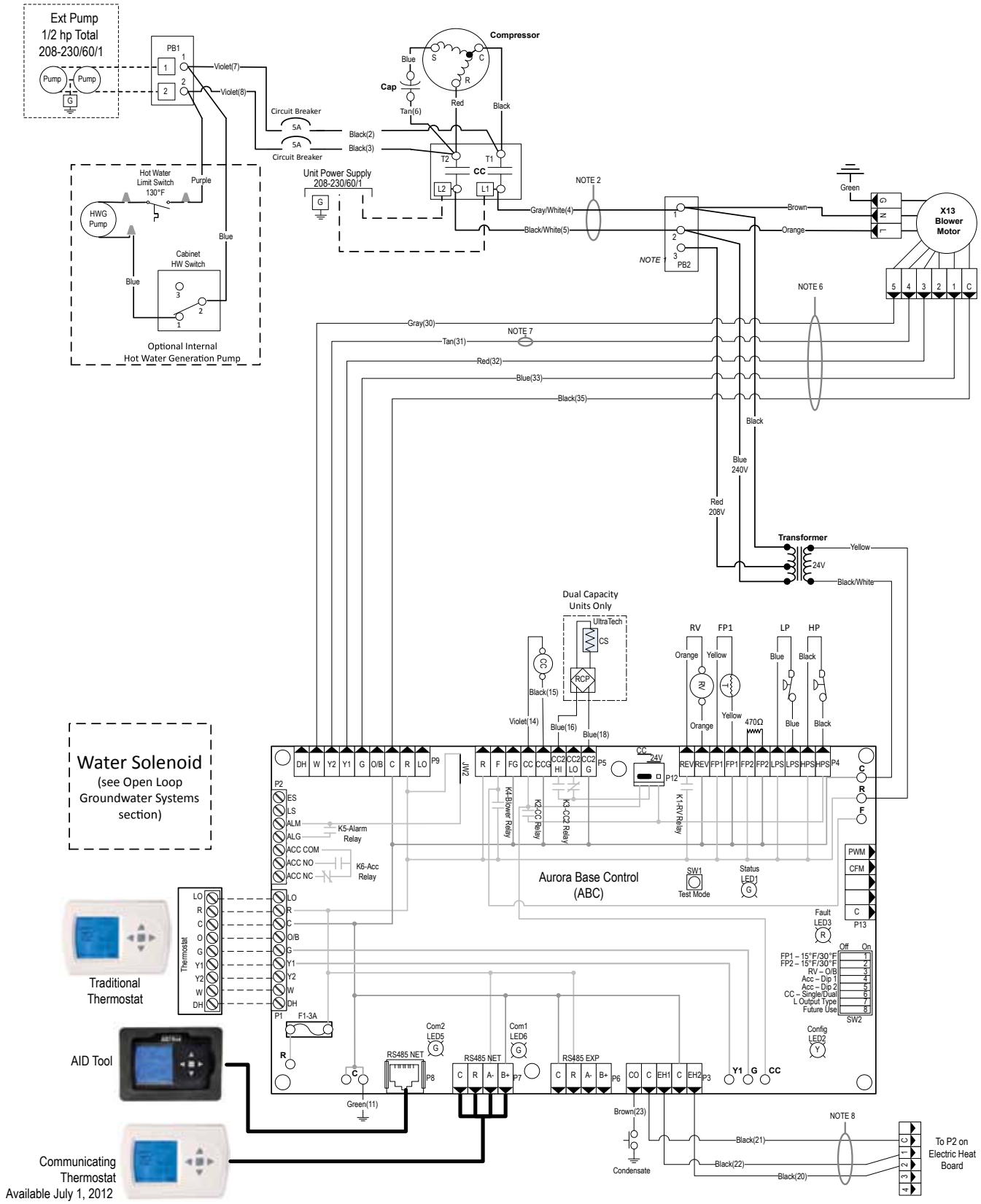

Wiring Schematics cont.

Aurora Base with X13 cont.

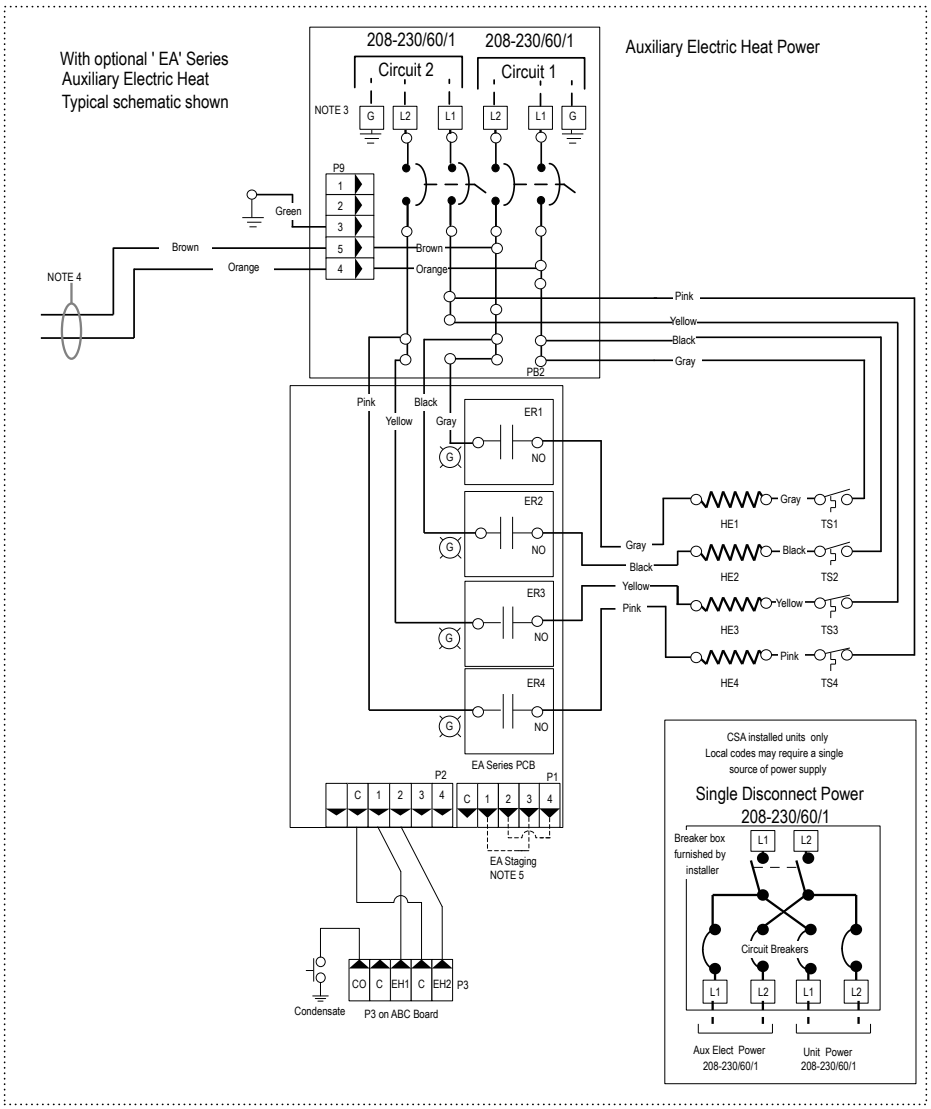

Legend

- Factory Low voltage wiring
- Factory Line voltage wiring
- Field low voltage wiring
- Field line voltage wiring
- Optional block
- DC Voltage PCB traces
- Junction
- Quick connect terminal
- Wire nut
- Field wire lug
- Ground
- Relay Contacts- N.O., N.C.
- Fuse/Breaker
- Thermistor
- Light emitting diode - Green
- Relay coil
- Capacitor w/ bleed resistor
- Switch - Condensate overflow
- Switch - High pressure
- Switch - Low pressure
- Polarized connector

CC / CC2-	Compressor Contactor	PB1, PB2 -	Power blocks
CO -	Condensate overflow sensor	PS -	Power strip
CR1 -	Hot water generator pump relay	RV -	Reversing Valve coil
CR2-	Loop pump relay	SW2 -	DIP package 8 position
CR3 -	PSC Blower Speed Relay	TS -	Thermal limit switch
CR4 -	PSC Blower Power Relay	HWL -	Hot water limit sensor
CS -	Compressor Solenoid	SC -	Start Contactor
F1 and F2 -	Fuses	SR -	Start Relay
HE -	Heater element	FP1 -	Water Coil Limit Sensor
HP -	High pressure switch		
ER1 to ER4 -	Aux heat stage relays		
LP -	Low pressure switch		

Notes

1 - Switch blue and red wires for 208V operation.
2 - The blk/wh and gray/wh wires are removed when Aux Heat is installed
3 - Use manufacturer's part number 19P592-01 (jumper bar assembly) when single source power is required.
4 - When connected the Auxiliary Heat powers blower and controls. Wires are secured at blower.
5 - For additional Auxiliary Heat staging place jumpers as shown.
6 - Refer to units X13 MOTOR LOW VOLTAGE CONNECTION table for factory settings.
7 - Y2 input wire Tan(31) not connected on Single Speed units. Wire is secured at blower.
8 - Wires provided for Auxiliary Heat low voltage control. Wires are secured at blower.

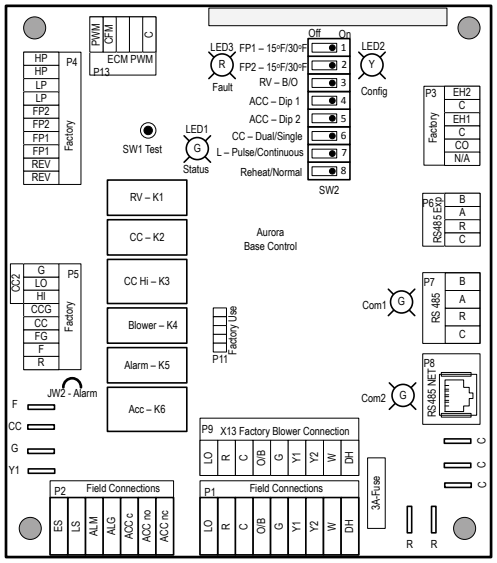

Aurora LED Flash Codes

Slow Flash	1 second ON and 1 second OFF
Fast Flash	250 milliseconds ON and 250 milliseconds OFF
Flash Code	250 milliseconds ON and 250 milliseconds OFF with a 10 second pause before repeating

Random Start Delay (Alternating Colors)		Configuration LED (LED2, Yellow)	
Status LED (LED1, Green)	Fast Flash	No Software Override	OFF
Configuration LED (LED2, Yellow)	Fast Flash	DIP Switch Override	Slow Flash
Fault LED (LED3, Red)	Fast Flash		
Fault LED (LED3, Red)		**Status LED (LED1, Green)**	
Normal Mode	OFF	Normal Mode	ON
Input Fault Lockout	Flash Code 1	Control is Non-functional	OFF
High Pressure Lockout	Flash Code 2	Test Mode	Slow Flash
Low Pressure Lockout	Flash Code 3	Lockout Active	Fast Flash
Future Use	Flash Code 4	Dehumidification Mode	Flash Code 2
Low Water Coil Limit Lockout - FP1	Flash Code 5	Future Use	Flash Code 3
Reserved	Flash Code 6	Future Use	Flash Code 4
Condensate Overflow Lockout	Flash Code 7	Load Shed	Flash Code 5
Over/Under Voltage Shutdown	Flash Code 8	ESD	Flash Code 6
Future Use	Flash Code 9	Future Use	Flash Code 7
Future Use	Flash Code 10		
Freeze Protection Sensor Error	Flash Code 11		

Aurora Timing Events

Event	Normal Mode	Test Mode
Random Start Delay	5 to 80 seconds	1 second
Compressor On Delay	5 seconds	< 1 second
Compressor Minimum On Time	2 minutes	5 seconds
Compressor Short Cycle Delay	4 minutes	15 seconds
Blower Off Delay	30 seconds	2 seconds
Fault Recognition Delay - High Pressure	Less than 1 second	Less than 1 second
Startup Bypass - Low Pressure	2 minutes	30 seconds
Fault Recognition Delay - Low Pressure	30 seconds	30 seconds
Startup Bypass - Low Water Coil Limit	2 minutes	30 seconds
Fault Recognition Delay - Low Water Coil Limit	30 seconds	30 seconds
Fault Recognition Delay - Condensate Overflow	30 seconds	30 seconds
Thermostat Call Recognition Time	2 seconds	2 seconds
Auxiliary Heat Staging Delay	5 minutes	20 seconds
Emergency Heat Staging Delay	2 minutes	7.5 seconds
Water Valve Slow Opening	90 seconds	90 seconds

X13 Motor Low Voltage Connections - Single Speed					
Model	**TAP-1**	**TAP-2**	**TAP-3**	**TAP-4**	**TAP-5**
22		BLUE		RED	GRAY
30	BLUE		RED	GRAY	
36	BLUE			RED	GRAY
42	BLUE	RED		GRAY	
48	BLUE		RED	GRAY	
60	BLUE			RED	GRAY
70	BLUE			RED	GRAY
X13 Motor Low Voltage Connections - Dual Capacity					
Model	**TAP-1**	**TAP-2**	**TAP-3**	**TAP-4**	**TAP-5**
26	BLUE	RED		TAN	GRAY
38	BLUE		RED	TAN	GRAY
49	BLUE	RED	TAN		GRAY
64	BLUE	RED		TAN	GRAY
72	BLUE	RED		TAN	GRAY

97P840-03 02/09/12

Wiring Schematics cont.

Aurora Base with X13 and IntelliStart

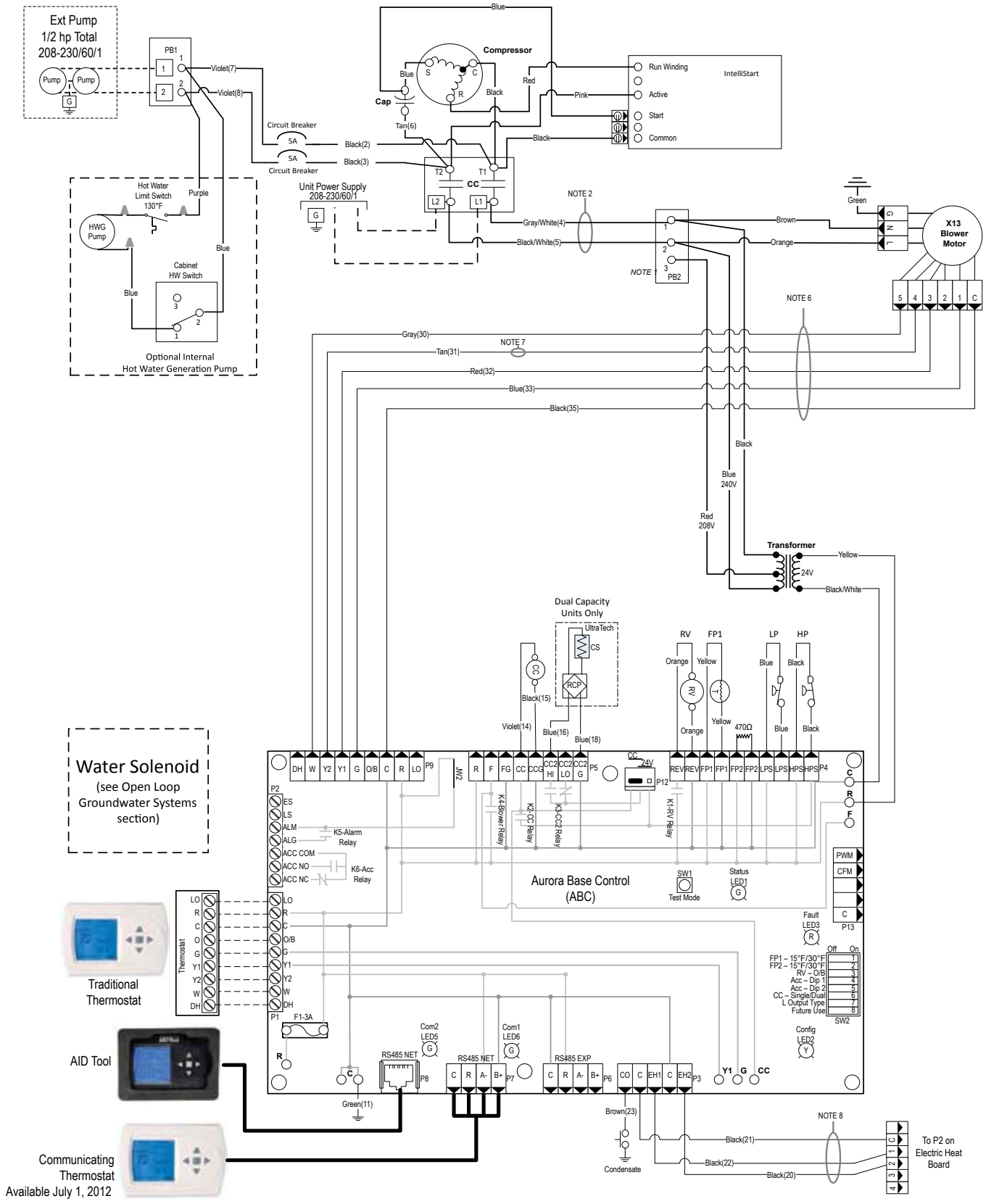

Wiring Schematics cont.

Aurora Base with X13 and IntelliStart cont.

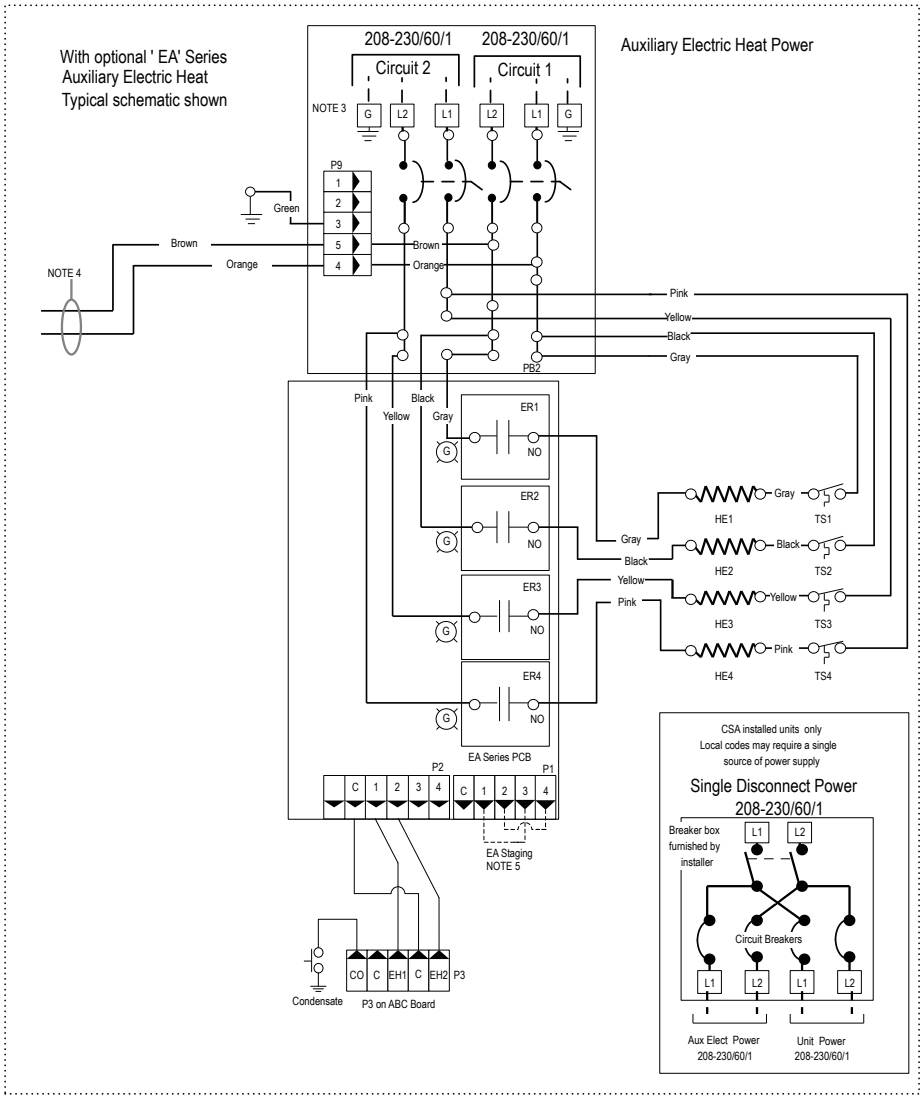

Legend

- Factory Low voltage wiring
- Factory Line voltage wiring
- Field low voltage wiring
- Field line voltage wiring
- Optional block
- DC Voltage PCB traces
- Junction
- Quick connect terminal
- Wire nut
- Field wire lug
- Ground
- Relay Contacts- N.O., N.C.
- Fuse/Breaker
- Thermistor
- Light emitting diode - Green
- Relay coil
- Capacitor w/ bleed resistor
- Switch - Condensate overflow
- Switch - High pressure
- Switch - Low pressure
- Polarized connector

CC / CC2-	Compressor Contactor	PB1, PB2 -	Power blocks
CO -	Condensate overflow sensor	PS -	Power strip
CR1 -	Hot water generator pump relay	RV -	Reversing Valve coil
CR2-	Loop pump relay	SW2 -	DIP package 8 position
CR3 -	PSC Blower Speed Relay	TS -	Thermal limit switch
CR4 -	PSC Blower Power Relay	HWL -	Hot water limit sensor
CS -	Compressor Solenoid	SC -	Start Contactor
F1 and F2 -	Fuses	SR -	Start Relay
HE -	Heater element	FP1 -	Water Coil Limit Sensor
HP -	High pressure switch		
ER1 to ER4 -	Aux heat stage relays		
LP -	Low pressure switch		

Notes

1 - Switch blue and red wires for 208V operation.
2 - The blk/wh and gray/wh wires are removed when Aux Heat is installed
3 - Use manufacturer's part number 19P592-01 (jumper bar assembly) when single source power is required.
4 - When connected the Auxiliary Heat powers blower and controls. Wires are secured at blower.
5 - For additional Auxiliary Heat staging place jumpers as shown.
6 - Refer to units X13 MOTOR LOW VOLTAGE CONNECTION table for factory settings.
7 - Y2 input wire Tan(31) not connected on Single Speed units. Wire is secured at blower.
8 - Wires provided for Auxiliary Heat low voltage control. Wires are secured at blower.

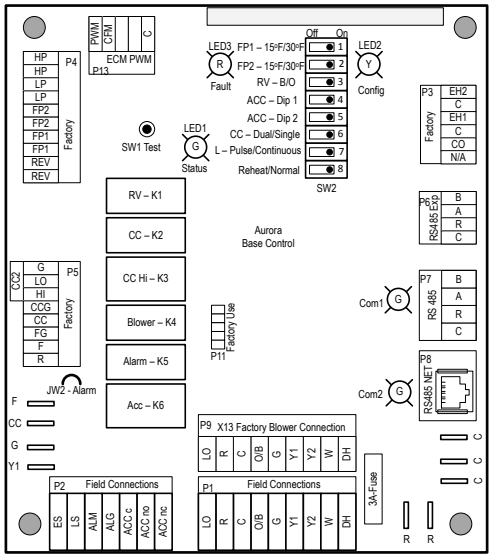

Aurora LED Flash Codes

Slow Flash	1 second ON and 1 second OFF
Fast Flash	250 milliseconds ON and 250 milliseconds OFF
Flash Code	250 milliseconds ON and 250 milliseconds OFF with a 10 second pause before repeating

Random Start Delay (Alternating Colors)		Configuration LED (LED2, Yellow)	
Status LED (LED1, Green)	Fast Flash	No Software Override	OFF
Configuration LED (LED2, Yellow)	Fast Flash	DIP Switch Override	Slow Flash
Fault LED (LED3, Red)	Fast Flash		
Fault LED (LED3, Red)		**Status LED (LED1, Green)**	
Normal Mode	OFF	Normal Mode	ON
Input Fault Lockout	Flash Code 1	Control is Non-functional	OFF
High Pressure Lockout	Flash Code 2	Test Mode	Slow Flash
Low Pressure Lockout	Flash Code 3	Lockout Active	Fast Flash
Future Use	Flash Code 4	Dehumidification Mode	Flash Code 2
Low Water Coil Limit Lockout - FP1	Flash Code 5	Future Use	Flash Code 3
Reserved	Flash Code 6	Future Use	Flash Code 4
Condensate Overflow Lockout	Flash Code 7	Load Shed	Flash Code 5
Over/Under Voltage Shutdown	Flash Code 8	ESD	Flash Code 6
Future Use	Flash Code 9	Future Use	Flash Code 7
Future Use	Flash Code 10		
Freeze Protection Sensor Error	Flash Code 11		

Aurora Timing Events

Event	Normal Mode	Test Mode
Random Start Delay	5 to 80 seconds	1 second
Compressor On Delay	5 seconds	< 1 second
Compressor Minimum On Time	2 minutes	5 seconds
Compressor Short Cycle Delay	4 minutes	15 seconds
Blower Off Delay	30 seconds	2 seconds
Fault Recognition Delay - High Pressure	Less than 1 second	Less than 1 second
Startup Bypass - Low Pressure	2 minutes	30 seconds
Fault Recognition Delay - Low Pressure	30 seconds	30 seconds
Startup Bypass - Low Water Coil Limit	2 minutes	30 seconds
Fault Recognition Delay - Low Water Coil Limit	30 seconds	30 seconds
Fault Recognition Delay - Condensate Overflow	30 seconds	30 seconds
Thermostat Call Recognition Time	2 seconds	2 seconds
Auxiliary Heat Staging Delay	5 minutes	20 seconds
Emergency Heat Staging Delay	2 minutes	7.5 seconds
Water Valve Slow Opening	90 seconds	90 seconds

X13 Motor Low Voltage Connections - Single Speed

Model	TAP-1	TAP-2	TAP-3	TAP-4	TAP-5
22		BLUE		RED	GRAY
30	BLUE		RED	GRAY	
36	BLUE			RED	GRAY
42	BLUE	RED		GRAY	
48	BLUE		RED	GRAY	
60	BLUE			RED	GRAY
70	BLUE			RED	GRAY

X13 Motor Low Voltage Connections - Dual Capacity

Model	TAP-1	TAP-2	TAP-3	TAP-4	TAP-5
26	BLUE	RED		TAN	GRAY
38	BLUE		RED	TAN	GRAY
49	BLUE	RED	TAN		GRAY
64	BLUE	RED		TAN	GRAY
72	BLUE	RED		TAN	GRAY

97P840-04 02/09/12

Wiring Schematics cont.

Aurora Base with ECM

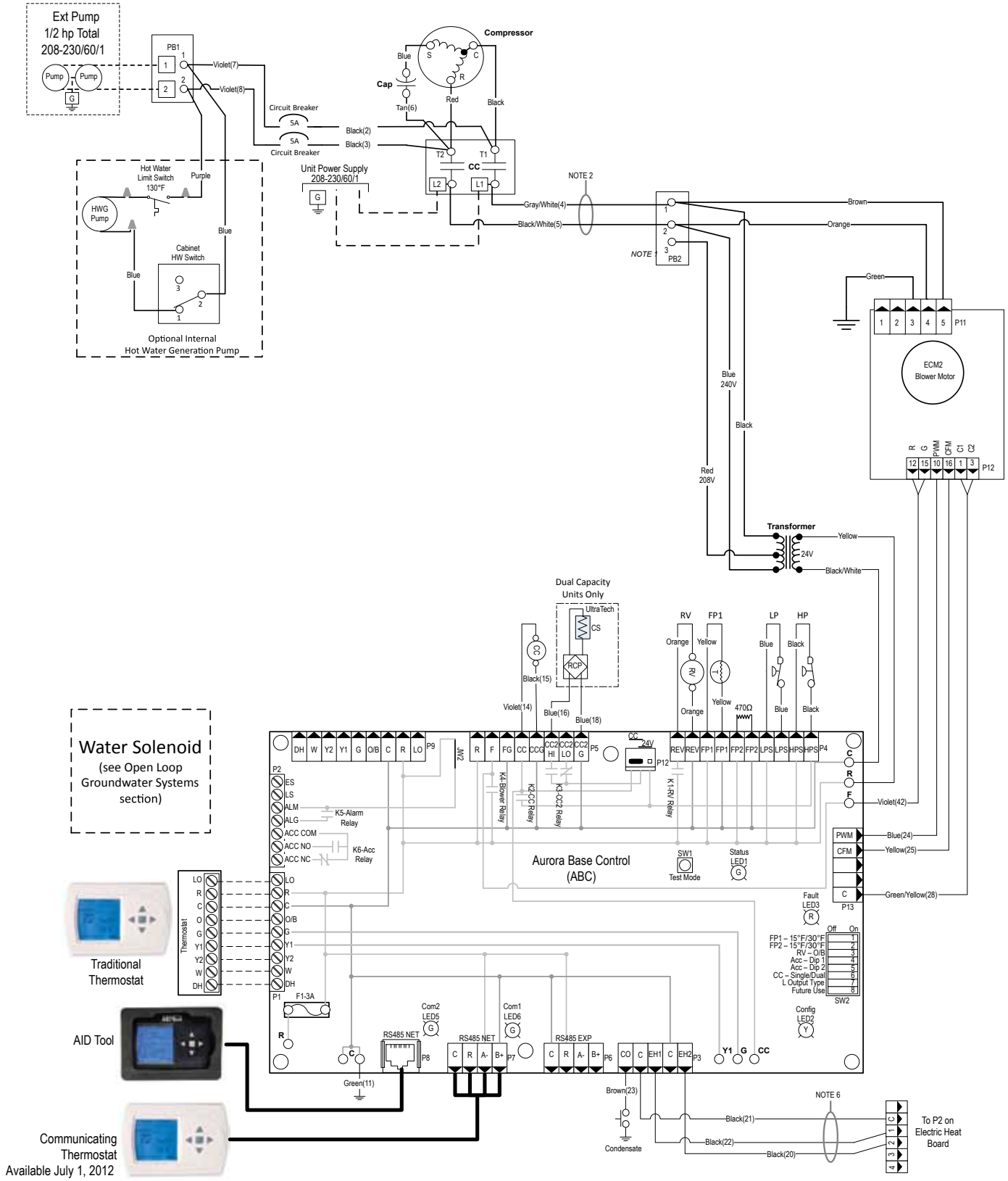

Wiring Schematics cont.

Aurora Base with ECM cont.

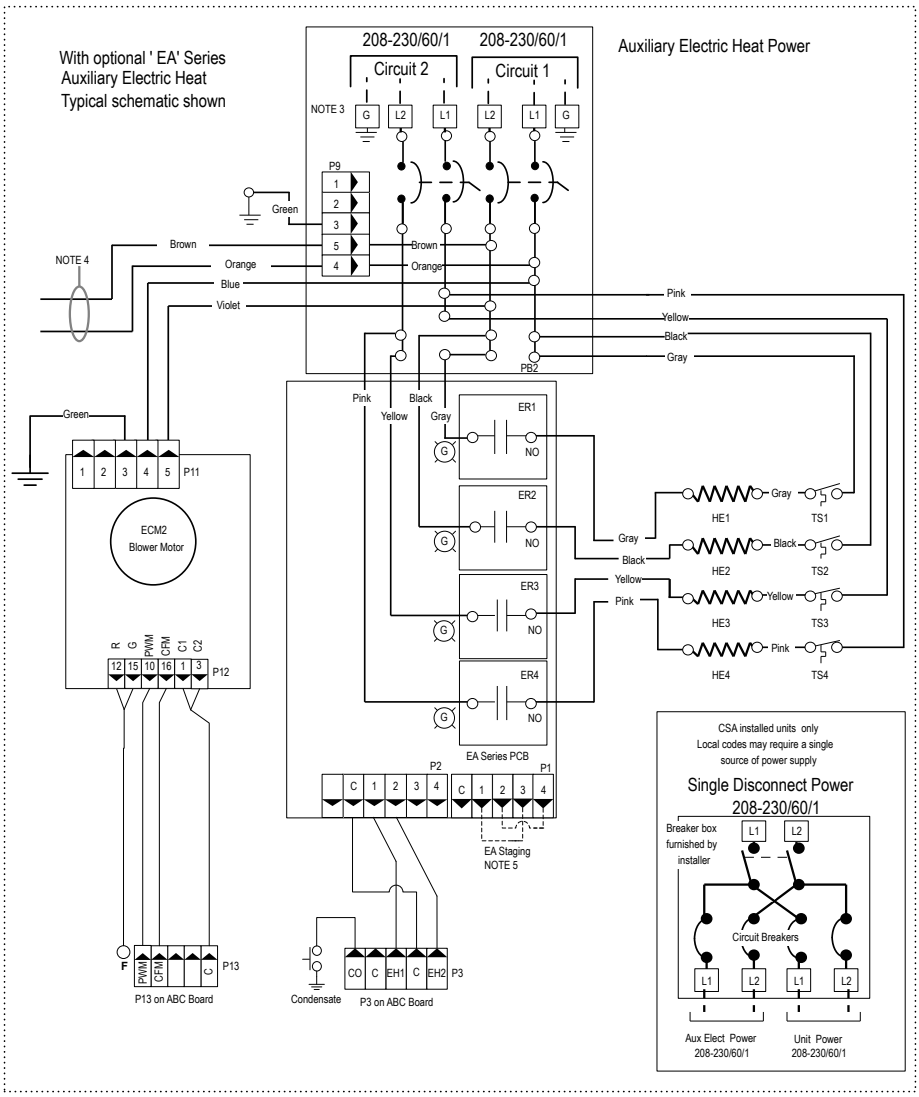

Legend

- Factory Low voltage wiring
- Factory Line voltage wiring
- Field low voltage wiring
- Field line voltage wiring
- Optional block
- DC Voltage PCB traces
- Junction
- Quick connect terminal
- Wire nut
- Field wire lug
- Ground
- Relay Contacts- N.O., N.C.
- Fuse/Breaker
- Thermistor
- Light emitting diode - Green
- Relay coil
- Capacitor w/ bleed resistor
- Switch - Condensate overflow
- Switch - High pressure
- Switch - Low pressure
- Polarized connector

CC / CC2-	Compressor Contactor	PB1, PB2 -	Power blocks
CO -	Condensate overflow sensor	PS -	Power strip
CR1 -	Hot water generator pump relay	RV -	Reversing Valve coil
CR2-	Loop pump relay	SW2 -	DIP package 8 position
CR3 -	PSC Blower Speed Relay	TS -	Thermal limit switch
CR4 -	PSC Blower Power Relay	HWL -	Hot water limit sensor
CS -	Compressor Solenoid	SC -	Start Contactor
F1 and F2 -	Fuses	SR -	Start Relay
HE -	Heater element	FP1 -	Water Coil Limit Sensor
HP -	High pressure switch		
ER1 to ER4 -	Aux heat stage relays		
LP -	Low pressure switch		

Notes

1 - Switch blue and red wires for 208V operation.
2 - The blk/wh and gray/wh wires are removed when Aux Heat is installed
3 - Use manufacturer's part number 19P592-01 (jumper bar assembly) when single source power is required.
4 - When installed the Auxiliary Heat powers blower and controls.
5 - For additional Auxiliary Heat staging place jumpers as shown.
6 - Wires provided for Auxiliary Heat low voltage control. Wires are secured at blower.

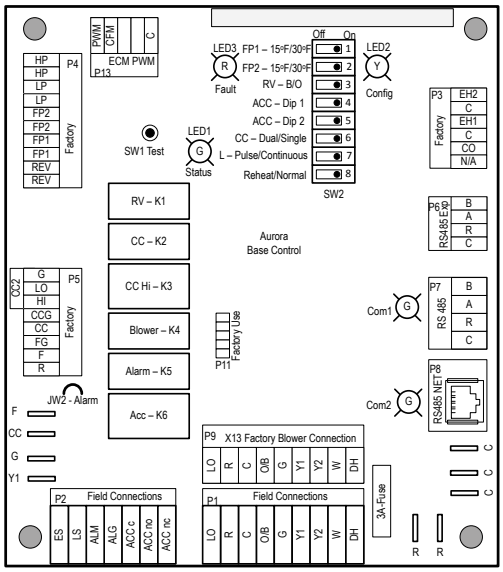

Aurora LED Flash Codes

Slow Flash	1 second ON and 1 second OFF
Fast Flash	250 milliseconds ON and 250 milliseconds OFF
Flash Code	250 milliseconds ON and 250 milliseconds OFF with a 10 second pause before repeating

Random Start Delay (Alternating Colors)		Configuration LED (LED2, Yellow)	
Status LED (LED1, Green)	Fast Flash	No Software Override	OFF
Configuration LED (LED2, Yellow)	Fast Flash	DIP Switch Override	Slow Flash
Fault LED (LED3, Red)	Fast Flash		

Fault LED (LED3, Red)		Status LED (LED1, Green)	
Normal Mode	OFF	Normal Mode	ON
Input Fault Lockout	Flash Code 1	Control is Non-functional	OFF
High Pressure Lockout	Flash Code 2	Test Mode	Slow Flash
Low Pressure Lockout	Flash Code 3	Lockout Active	Fast Flash
Future Use	Flash Code 4	Dehumidification Mode	Flash Code 2
Low Water Coil Limit Lockout - FP1	Flash Code 5	Future Use	Flash Code 3
Reserved	Flash Code 6	Future Use	Flash Code 4
Condensate Overflow Lockout	Flash Code 7	Load Shed	Flash Code 5
Over/Under Voltage Shutdown	Flash Code 8	ESD	Flash Code 6
Future Use	Flash Code 9	Future Use	Flash Code 7
Future Use	Flash Code 10		
Freeze Protection Sensor Error	Flash Code 11		

Aurora Timing Events

Event	Normal Mode	Test Mode
Random Start Delay	5 to 80 seconds	1 second
Compressor On Delay	5 seconds	< 1 second
Compressor Minimum On Time	2 minutes	5 seconds
Compressor Short Cycle Delay	4 minutes	15 seconds
Blower Off Delay	30 seconds	2 seconds
Fault Recognition Delay - High Pressure	Less than 1 second	Less than 1 second
Startup Bypass - Low Pressure	2 minutes	30 seconds
Fault Recognition Delay - Low Pressure	30 seconds	30 seconds
Startup Bypass - Low Water Coil Limit	2 minutes	30 seconds
Fault Recognition Delay - Low Water Coil Limit	30 seconds	30 seconds
Fault Recognition Delay - Condensate Overflow	30 seconds	30 seconds
Thermostat Call Recognition Time	2 seconds	2 seconds
Auxiliary Heat Staging Delay	5 minutes	20 seconds
Emergency Heat Staging Delay	2 minutes	7.5 seconds
Water Valve Slow Opening	90 seconds	90 seconds

Wiring Schematics cont.

Aurora Base with ECM and IntelliStart

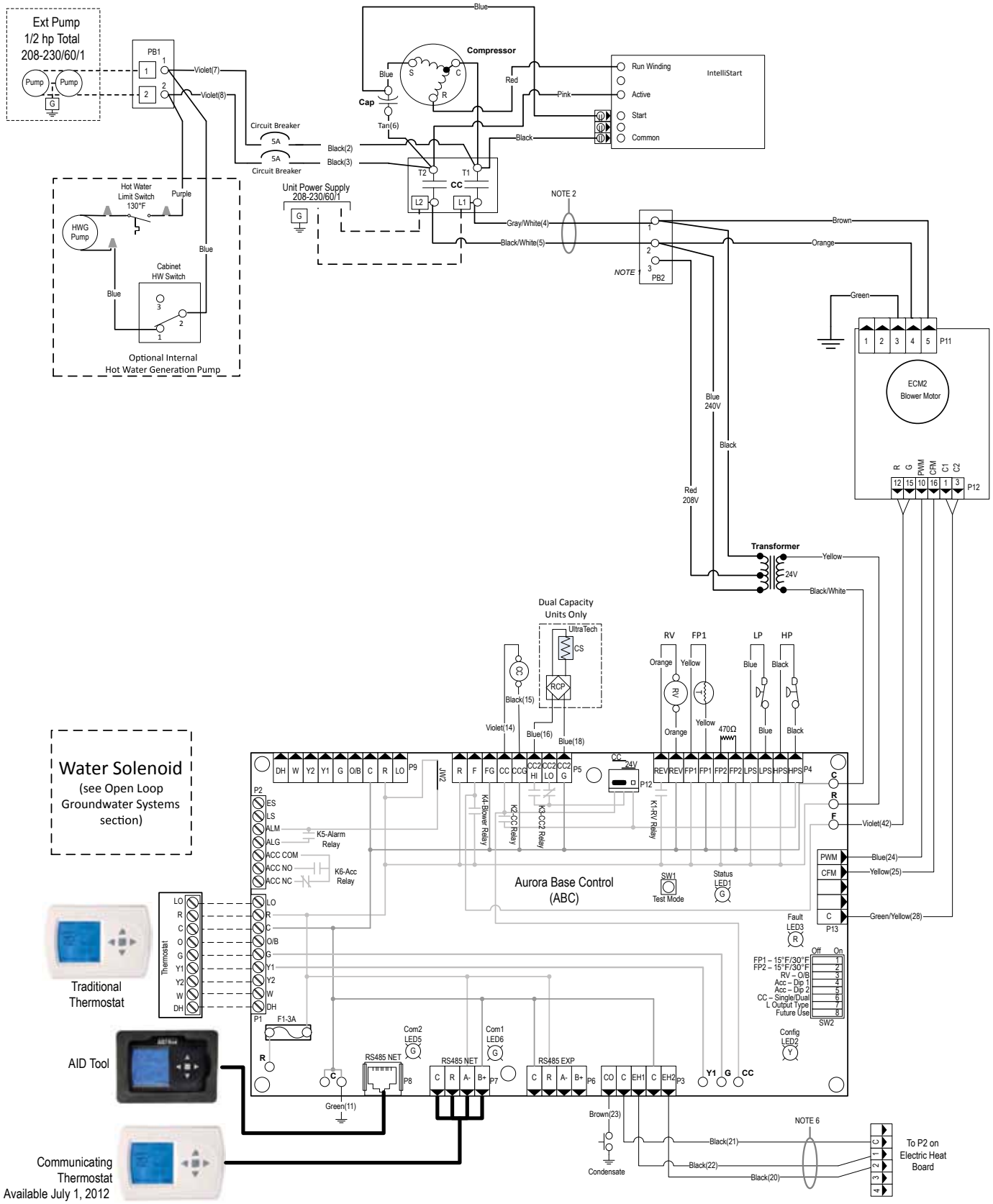

Wiring Schematics cont.

Aurora Base with ECM and IntelliStart cont.

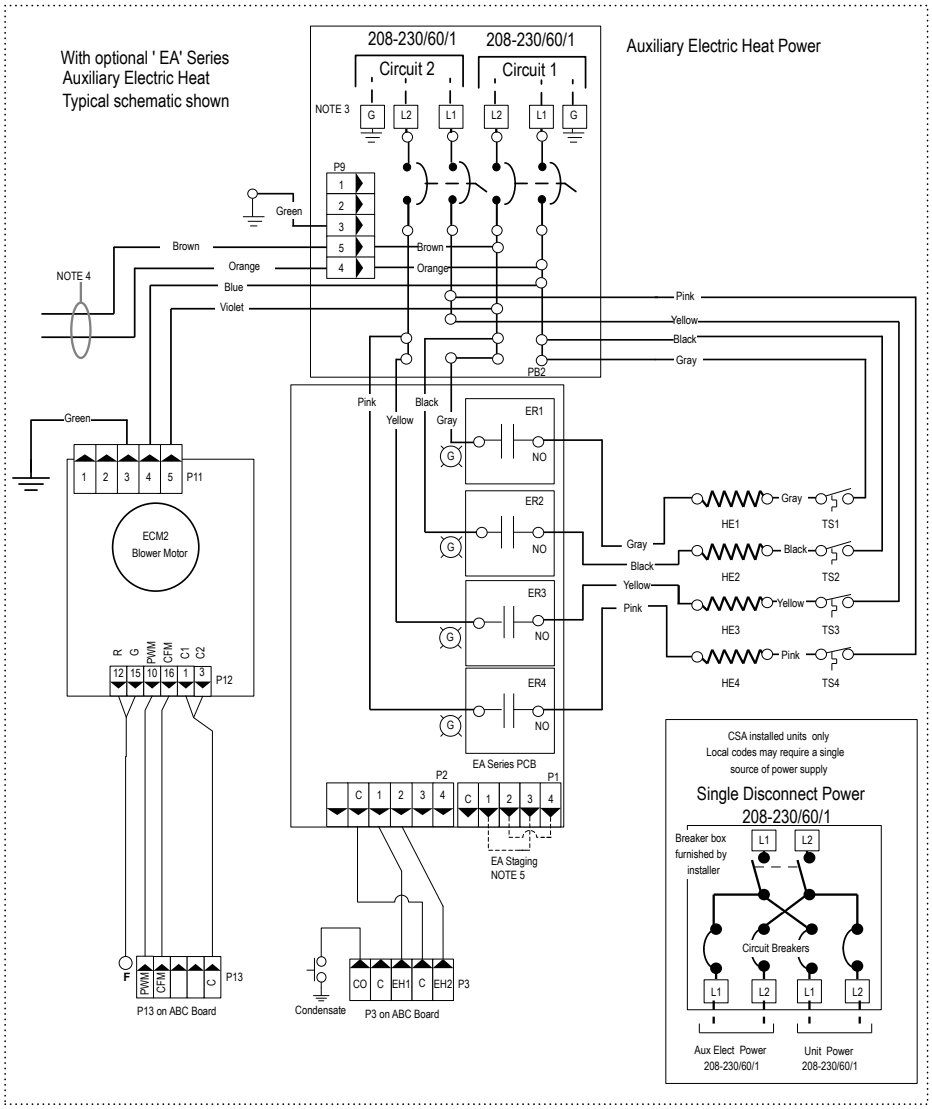

Legend

- Factory Low voltage wiring
- Factory Line voltage wiring
- Field low voltage wiring
- Field line voltage wiring
- Optional block
- DC Voltage PCB traces
- Junction
- Quick connect terminal
- Wire nut
- Field wire lug
- Ground
- Relay Contacts- N.O., N.C.
- Fuse/Breaker
- Thermistor
- Light emitting diode - Green
- Relay coil
- Capacitor w/ bleed resistor
- Switch - Condensate overflow
- Switch - High pressure
- Switch - Low pressure
- Polarized connector

CC / CC2-	Compressor Contactor	PB1, PB2 -	Power blocks
CO -	Condensate overflow sensor	PS -	Power strip
CR1 -	Hot water generator pump relay	RV -	Reversing Valve coil
CR2-	Loop pump relay	SW2 -	DIP package 8 position
CR3 -	PSC Blower Speed Relay	TS -	Thermal limit switch
CR4 -	PSC Blower Power Relay	HWL -	Hot water limit sensor
CS -	Compressor Solenoid	SC -	Start Contactor
F1 and F2 -	Fuses	SR -	Start Relay
HE -	Heater element	FP1 -	Water Coil Limit Sensor
HP -	High pressure switch		
ER1 to ER4 -	Aux heat stage relays		
LP -	Low pressure switch		

Notes

1 - Switch blue and red wires for 208V operation.
2 - The blk/wh and gray/wh wires are removed when Aux Heat is installed
3 - Use manufacturer's part number 19P592-01 (jumper bar assembly) when single source power is required.
4 - When installed, the Auxiliary Heat powers blower and controls.
5 - For additional Auxiliary Heat staging place jumpers as shown.
6 - Wires provided for Auxiliary Heat low voltage control. Wires are secured at blower.

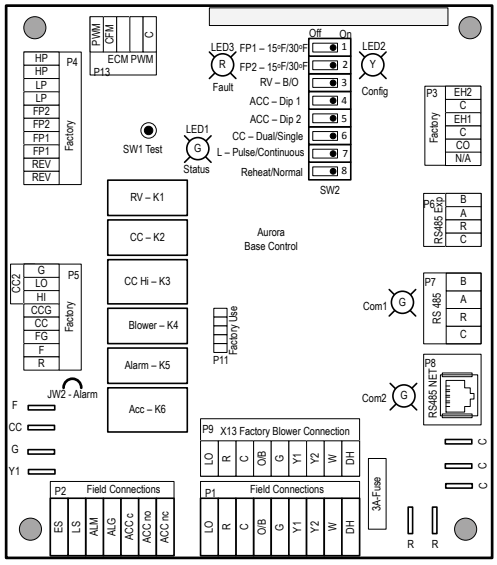

Aurora LED Flash Codes			
Slow Flash	1 second ON and 1 second OFF		
Fast Flash	250 milliseconds ON and 250 milliseconds OFF		
Flash Code	250 milliseconds ON and 250 milliseconds OFF with a 10 second pause before repeating		
Random Start Delay (Alternating Colors)		**Configuration LED (LED2, Yellow)**	
Status LED (LED1, Green)	Fast Flash	No Software Override	OFF
Configuration LED (LED2, Yellow)	Fast Flash	DIP Switch Override	Slow Flash
Fault LED (LED3, Red)	Fast Flash		
Fault LED (LED3, Red)		**Status LED (LED1, Green)**	
Normal Mode	OFF	Normal Mode	ON
Input Fault Lockout	Flash Code 1	Control is Non-functional	OFF
High Pressure Lockout	Flash Code 2	Test Mode	Slow Flash
Low Pressure Lockout	Flash Code 3	Lockout Active	Fast Flash
Future Use	Flash Code 4	Dehumidification Mode	Flash Code 2
Low Water Coil Limit Lockout - FP1	Flash Code 5	Future Use	Flash Code 3
Reserved	Flash Code 6	Future Use	Flash Code 4
Condensate Overflow Lockout	Flash Code 7	Load Shed	Flash Code 5
Over/Under Voltage Shutdown	Flash Code 8	ESD	Flash Code 6
Future Use	Flash Code 9	Future Use	Flash Code 7
Future Use	Flash Code 10		
Freeze Protection Sensor Error	Flash Code 11		

Aurora Timing Events		
Event	**Normal Mode**	**Test Mode**
Random Start Delay	5 to 80 seconds	1 second
Compressor On Delay	5 seconds	< 1 second
Compressor Minimum On Time	2 minutes	5 seconds
Compressor Short Cycle Delay	4 minutes	15 seconds
Blower Off Delay	30 seconds	2 seconds
Fault Recognition Delay - High Pressure	Less than 1 second	Less than 1 second
Startup Bypass - Low Pressure	2 minutes	30 seconds
Fault Recognition Delay - Low Pressure	30 seconds	30 seconds
Startup Bypass - Low Water Coil Limit	2 minutes	30 seconds
Fault Recognition Delay - Low Water Coil Limit	30 seconds	30 seconds
Fault Recognition Delay - Condensate Overflow	30 seconds	30 seconds
Thermostat Call Recognition Time	2 seconds	2 seconds
Auxiliary Heat Staging Delay	5 minutes	20 seconds
Emergency Heat Staging Delay	2 minutes	7.5 seconds
Water Valve Slow Opening	90 seconds	90 seconds

The Aurora™ Control System

Aurora 'Base' Control

The Aurora 'Base' Control (ABC) System is a complete residential and commercial comfort system that brings all aspects of the HVAC system into one cohesive module network. The ABC features microprocessor control and HP, LP, condensate and freeze detection, over/under voltage faults, along with communicating thermostat capability for complete fault detection text at the thermostat.

Aurora uses the Modbus communication protocol to communicate between modules. Each module contains the logic to control all features that are connected to the module. The Aurora 'Base' Control (ABC) has two Modbus channels. The first channel is configured as a master for connecting to devices such as a communicating thermostat, expansion board, or other slave devices. The second channel is configured as a slave for connecting the Aurora Interface Diagnostic Tool (AID Tool).

Aurora 'Advanced' Control
(Available July 1, 2012)

The Aurora 'Advanced' Control expands on the capability of the Aurora 'Base' Control (ABC) System by adding the Aurora Expansion Board (AXB). The additional features include compressor current monitoring, loop pump slaving, intelligent hot water generator control, variable speed pump capability, and also allows for optional energy, refrigeration, and performance monitoring add-on sensor kits. The AXB also features a second field configurable accessory relay, and two home automation inputs that are AID configurable for different types of alarms from sump pumps to home security. The Smart Grid input is AID configurable with many options to react to Utility controlled relay operation for ON Peak optimization. The AXB also expands the communication capability for IntelliZone2 ready operation as well as other expansion with the ClimateTalk protocol.

Aurora Control Features	Description	Aurora 'Base'	Aurora 'Advanced'
Microprocessor Compressor Control	Microprocessor control of compressor for timings with FP1, HP, LP, Condensate, assignable Acc relay	•	•
Advanced Microprocessor Features	Smart Grid, Home Automation Alarm Inputs, and Accessory2 Relay (HRV/ERV)	-	•
Base Hot Water Generator Operation	Compressor Contactor powers Hot Water Generator Pump with inline circuit breaker and thermostat limit.	•	See below
Advanced Hot Water Generator Control	Microprocessor and separate power relay for Hot Water Generator Pump with digital temperature monitoring and multiple HWA setpoint selection.	-	•
Base Loop Pump Control	Compressor Contactor powers Loop Pump with inline circuit breaker and no loop pump slaving capability.	•	See below
Advanced Speed Pump Control	Microprocessor and separate power relay for loop pump and inline circuit breakers and loop pump slaving.	-	•
Variable Speed Pump	Capable of setup, monitoring and controlling a variable speed flow center.	-	•
Compressor Monitoring	Control monitors compressor starts for high current, missing leg etc.	-	•
Demand Dehumidification	Coil temperature is monitored and air flow is reduced for maximum latent moisture removal.	-	7 Series Variable Speed Only
Smart Grid/Utility Input	Allows simple input to externally enable of occupied/ unoccupied mode for basic utility time of use programs.	-	Dry Contact x1
Home Automation Alarm Input	Allows simple input to signal sump, security, or smoke/ CO sensor alarms from other home automation or security systems. The two inputs can be field configured to a number of options and logic.	-	Dry Contact x2
HAN/Smart Grid Com (AWOL and Portal) Kit	Allows direct communication of the Aurora to Smart Meters, Home Automation Network and Internet.	-	Optional AWL
IntelliZone2® Compatibility	IntelliZone requires traditional TStat inputs. IntelliZone2 communicates to HP via AXB board.	With Optional AXB kit and IntelliZone2	Optional IntelliZone2

The Aurora Control System cont.

Service Device	Description	Aurora 'Base'	Aurora 'Advanced'
 **Aurora Interface and Diagnostic (AID) Tool**	Allows setup, monitoring and troubleshooting of any Aurora Control. **NOTE:** Although the ABC has basic compatibility with all Aurora, new product features may not be available on older AID Tools. To simplify the basic compatibility ensure the version of AID is at least the same or greater than the ABC software version.	For Service (Ver. 1.xx or greater)	For Service (Ver. 2.xx or greater)

Add On Control Feature Kits (field or factory Installed)	Description	Aurora 'Base'	Aurora 'Advanced'
Geo Energy Monitoring Kit	Monitors realtime power consumption of compressor, blower, aux heat and pump. Requires thermostat TP32U03, TP32U04, TPCM32U03***, TPCM32U04***, or TPCC32U01***. AXB required.	-	Optional Sensor Kit
Refrigeration Monitoring Kit	Monitors realtime pressures, temperatures, superheat, and subcooling. AXB required.	-	Optional Sensor Kit
Performance Monitoring Kit	Monitors air and water temperatures, and water flow rate and calculates heat of extraction/rejection and loop pressure. AXB required.	-	Optional Sensor Kit
Data Logging (AWL) Kit	Allows data logging of up to 12 months. AXB required. Can also be temporarily installed.	-	Optional
HAN/Smart Grid Com (AWL and Portal) Kit	Allows direct communication of the Aurora to Smart Meters, HAN, and internet. AXB required.	-	Optional
AXB Kit for advanced hot water generator control, slaving, variable speed pump, IntelliZone2	Added to 5 Series for key features of advanced hot water generator control, advanced loop control/slaving, IntelliZone2 communication, and variable speed pump control.	Optional	Standard

Add On Thermostats and Zoning	Description	Aurora 'Base'	Aurora 'Advanced'
 **TP32U03/04 - MonoChrome Traditional Y1, Y2 Thermostat**	Elite Stat with full english fault codes and alerts, traditional Y1, Y2 thermostat	Optional	Optional
 **TP32S01/02 - Traditional Y1, Y2 Thermostat**	Traditional Y1, Y2 thermostat	Optional	Optional
 **TPCM32U03/04 - MonoChrome Communicating Thermostat*** **	Elite Stat with full english fault codes and alerts, communicating thermostat	Optional	Optional
 **TPCC32U01 - Color Touchscreen Communicating Thermostat*** **	4.3 in. color touchscreen communicating thermostat with full english fault codes and alerts	Optional	Optional
IntelliZone® Zoning Compatibility	IntelliZone® is non-communicating zoning system requiring Y1, Y2 signals and controls the ECM blower motor directly.	Compatible (ECM Preferred)	Compatible (ECM Preferred)
 **IntelliZone2® Zoning*** **	Includes color main thermostat and up to 4 zones with 4 thermostat options (Sensor, Elite, Mini, Color). Requires AXB.	-	Optional

NOTES: * Some features are standard such as entering water and leaving air temperatures.
** Monochrome thermostat allows instantaneous energy measurement only. Color thermostat allows instantaneous and 13 month history.
*** IntelliZone2 and communicating thermostats will be available July 1, 2012.

The Aurora 'Base' Control System cont.

Aurora 'Base' Control

NOTE: Refer to the Aurora Base Control Application and Troubleshooting Guide and the Instruction Guide: Aurora Interface and Diagnostics (AID) Tool for additional information.

Control Features

Software ABC Standard 01.02 version

Single or Dual Capacity Compressors

Either single or dual capacity compressors can be operated.

ECM Blower Motor Option

A traditional ECM blower motor can be driven directly using the onboard PWM output. Three blower speeds are available based upon the G, Y1, and Y2/W input signals to the board. The blower speeds can be changed either by the ECM manual configurations mode method or by using the Aurora AID Tool directly. All three blower speeds can be set to the same speed if desired.

X13 Blower Motor Option

An X13 blower motor will be driven directly using the thermostat connections. Any three of the G, Y1, or Y2/W signals can drive any of the 5 available pre-programmed blower speeds on the motor.

Other Control Features

- Random start at power up
- Anti-short cycle protection
- High and low pressure cutouts
- Loss of charge
- Water coil freeze detection
- Air coil freeze detection
- Over/under voltage protection
- Condensate overflow sensor
- Load shed
- Dehumidification
- Emergency shutdown
- Diagnostic LED
- Test mode push button switch
- Two auxiliary electric heat outputs
- Alarm output
- Accessory output with N.O. and N.C.
- Modbus communication (master)
- Modbus communication (slave)

Field Selectable Options via Hardware

DIP Switch (SW1) – Test/Configuration Button (See SW1 Operation Table)

Test Mode

The control is placed in the test mode by holding the push button switch SW1 for 2 - 5 seconds. In test mode most of the control timings will be shortened by a factor of sixteen (16). LED3 (green) will flash at 1 second on and 1 second off. Additionally, when entering test mode LED1 (red) will flash the last lockout one time. Test mode will automatically time out after 30 minutes.

Test mode can be exited by pressing and holding the SW1 button for 2 to 5 seconds or by cycling the power.

Test mode will automatically be exited after 30 minutes.

ECM Configuration Mode

The control is placed in ECM configuration mode by holding the pushbutton switch SW1 for 5 to 10 seconds, the high, medium, and low ECM speeds can be selected by following the LED display lights. LED2 (yellow) will fast flash when entering ECM configuration. When setting low speed LED3 (green) will be continuously lit, for medium speed LED1 (red) will be continuously lit, and for high speed both LED3 (green) and LED1 (red) will be continuously lit. During ECM configuration mode LED2 (yellow) will flash each of the 12 possible blower speeds 3 times. When the desired speed is flashed press SW1, LED2 will fast flash until SW1 is released. Low speed has now been selected. Next select medium speed, and high speed blower selections following the same process above. After third selection has been made, the control will exit the ECM configuration mode.

Reset Configuration Mode

The control is placed in reset configuration mode by holding the push button switch SW1 for 50 to 60 seconds. This will reset all configuration settings and the EEPROM back to the factory default settings. LED3 (green) will turn off when entering reset configuration mode. Once LED3 (green) turns off release SW1 and the control will reset.

DIP Switch (SW2)

SW2-1 FP1 Selection – Low water coil temperature limit setting for freeze detection. On = 30°F; Off = 15°F.

SW2-2 FP2 Selection – Future Use

SW2-3 RV – O/B - thermostat type. Heat pump thermostats with "O" output in cooling or "B" output in Heating can be selected. On = O; Off = B.

SW2-4 and 2-5 Access Relay Operation (P2)

Access Relay Operation	SW2-4	SW2-5
Cycle with Blower	ON	ON
Cycle with Compressor	OFF	OFF
Water Valve Slow Opening	ON	OFF
(Future Use)	OFF	ON

The Aurora 'Base' Control System cont.

Cycle with Blower - The accessory relay will cycle with the blower output.

Cycle with Compressor - The accessory relay will cycle with the compressor output.

Water Valve Slow Opening - The accessory relay will cycle and delay both the blower and compressor output for 90 seconds.

SW2-6 CC Operation – selection of single or dual capacity compressor. On = Single Stage; Off = Dual Capacity
SW2-7 Lockout and Alarm Outputs (P2) – selection of a continuous or pulsed output for both the LO and ALM Outputs. On = Continuous; Off = Pulsed
SW2-8 *Future Use*

Alarm Jumper Clip Selection

From the factory, ALM is connected to 24 VAC via JW2. By cutting JW2, ALM becomes a dry contact connected to ALG.

ECM Blower Speeds

The blower speeds can be changed either by using the ECM manual configurations mode method or by using the Aurora AID Tool directly (see Instruction Guide: Aurora Interface and Diagnostic (AID) Tool topic).

Field Selectable Options via Software

(Selectable via the Aurora AID Tool)

ECM Blower Speeds

A traditional ECM blower motor can be driven directly using the onboard PWM output. Three blower speeds are available, based upon the G (low), Y1 (med), and Y2/W (high) input signals to the board. The blower speeds can be changed either by the ECM manual configurations mode method (see ECM Configuration Mode topic) or by using the Aurora AID Tool directly. All three blower speeds can be set to the same speed if desired.

Safety Features

The following safety features are provided to protect the compressor, heat exchangers, wiring and other components from damage caused by operation outside of design conditions.

Fuse – a 3 amp automotive type plug-in fuse provides protection against short circuit or overload conditions.

Anti-Short Cycle Protection – 4 minute anti-short cycle protection for the compressor.

Random Start – 5 to 80 second random start upon power up.

Fault Retry – in the fault condition, the control will stage off the outputs and then "try again" to satisfy the thermostat Y input call. Once the thermostat input calls are satisfied, the control will continue on as if no fault occurred. If 3 consecutive faults occur without satisfying the thermostat Y input call, then the control will go to Lockout mode.

Lockout – when locked out, the blower will operate continuously in low speed, and PSC blower motor output will remain on. The Alarm output (ALM) and Lockout output (L) will be turned on. The fault type identification display LED1 (Red) shall flash the fault code. To reset lockout conditions with SW2-8 On, thermostat inputs "Y1", "Y2", and "W" must be removed for at least three (3) seconds. To reset lockout conditions with SW2-8 Off, thermostat inputs "Y1", "Y2", "W", and "DH" must be removed for at least three (3) seconds. Lockout may also be reset by turning power off for at least 5 seconds or by enabling the emergency shutdown input for at least 3 seconds.

Lockout With Emergency Heat - if the control is locked out in the heating mode, and a Y2 or W input is received, the control will operate in the emergency heat mode while the compressor is locked out. The first emergency heat output will be energized ten (10) seconds after the W input is received, and the blower will shift to high speed. If the control remains locked out, and the W input is present, additional stage of emergency heat will stage on after two (2) minutes. When the W input is removed, all of the emergency heat outputs will turn off, and the ECM blower will shift to low speed and PSC blower motor output will remain on.

High Pressure – fault is recognized when the Normally Closed High Pressure Switch, P4-9/10 opens, no matter how momentarily. The High Pressure Switch is electrically in series with the Compressor Contactor and serves as a hard-wired limit switch if an overpressure condition should occur.

Low Pressure - fault is recognized when the Normally Closed Low Pressure Switch, P4-7/8 is continuously open for 30 seconds. Closure of the LPS any time during the 30 second recognition time restarts the 30 second continuous open requirement. A continuously open LPS shall not be recognized during the 2 minute startup bypass time.

Loss of Charge – fault is recognized when the Normally Closed Low Pressure Switch, P4-7/8 is open prior to the compressor starting.

Condensate Overflow - fault is recognized when the impedance between this line and 24 VAC common or chassis ground drops below 100K ohms for 30 seconds continuously.

Low Water Coil Temperature Limit - set points shall be either 30°F or 15°F. When the thermistor temperature drops below the selected set point, the control shall begin counting down the 30 seconds delay. If the thermistor value rises above the selected set point, then the count should reset. The resistance value must remain below the selected set point for the entire length of the appropriate delay to be recognized as a fault. This fault will be ignored for the initial 2 minutes of the compressor run time.

Over/Under Voltage Shutdown - An over/under voltage condition exists when the control voltage is outside the range of 18 VAC to 30 VAC. If the over/under voltage shutdown lasts for 15 minutes, the lockout and alarm relay will be energized. Over/under voltage shutdown is self-resetting in that if the voltage comes back within range

The Aurora 'Base' Control System cont.

of 18 VAC to 30 VAC for at least 0.5 seconds, then normal operation is restored.

Operation Description

Power Up - The unit will not operate until all the inputs and safety controls are checked for normal conditions. The unit has a 5 to 80 second random start delay at power up. Then the compressor has a 4 minute anti-short cycle delay after the random start delay.

Standby In standby mode, Y1, Y2, W, DH, and G are not active. Input O may be active. The blower and compressor will be off.

Heating Operation

Heating, 1st Stage (Y1) - The blower is started on low speed immediately and the compressor is energized 10 seconds after the Y1 input is received. The ECM blower motor is switched to medium speed 15 seconds after the Y1 input.

Heating, 2nd Stage (Y1, Y2) - The compressor will be staged to full capacity 20 seconds after Y2 input is received. The ECM blower will shift to high speed 15 seconds after the Y2 input is received.

Heating, 3rd Stage (Y1, Y2, W) - The first stage of electric heat is energized 10 seconds after the W command is received. If the demand continues the second stage of electric heat will be energized after 5 minutes.

Emergency Heat (W) - The blower will be started on low speed, 10 seconds later the first stage of electric heat will be turned on. 5 seconds after the first stage of electric heat is energized the blower will shift to high speed. If the emergency heat demand is not satisfied after 2 minutes the second electric heat stage will be energized.

Blower (G) - The blower will start immediately upon receiving a thermostat G command. If there are no other commands from the thermostat the ECM will run on low speed until the G command is removed. Regardless of blower input (G) from the thermostat, the blower will remain on low speed for 30 seconds at the end of each heating cycle.

Cooling Operation

In all cooling operations, the reversing valve directly tracks the O input. Thus, anytime the O input is present, the reversing valve will be energized.

Cooling, 1st Stage (Y1, O) - The blower is started on low speed immediately and the compressor is energized 10 seconds after the Y1 input is received. The ECM blower motor is switched to medium speed 15 seconds after the Y1 input.

Cooling, 2nd Stage (Y1, Y2, O) - The compressor will be staged to full capacity 20 seconds after Y2 input was received. The ECM blower will shift to high speed 15 seconds after the Y2 input was received.
Blower (G) - The blower will start immediately upon receiving a thermostat G command. If there are no other commands from the thermostat the ECM will run on low speed until the G command is removed. Regardless of blower input (G) from the thermostat, the blower will remain on low speed for 30 seconds at the end of each heating, cooling, emergency heat, and reheat cycle.

Dehumidification (Y1, O, DH or Y1, Y2, O, DH) - When a DH command is received from the thermostat during a compressor call for cooling the ECM blower speed will be reduced by 15% to increase dehumidification.

Emergency Shutdown - Four (4) seconds after a valid ES input, P2-7 is present, all control outputs will be turned off and remain off until the emergency shutdown input is no longer present. The first time that the compressor is started after the control exits the emergency shutdown mode, there will be an anti-short cycle delay followed by a random start delay. Input must be tied to common to activate.

Continuous Blower Operation - The blower output will be energized any time the control has a G input present, unless the control has an emergency shutdown input present. The blower output will be turned off when G input is removed.

Load Shed
The LS input disables all outputs with the exception of the blower output. When the LS input has been cleared, the anti-short cycle timer and random start timer will be initiated. Input must be tied to common to activate.

The Aurora 'Base' Control System cont.

LED Displays

These three LEDs display the status, configuration, and fault codes for the control. These can also be read in plain English via the Aurora AID tool.

Status LED (LED3, Green)

Description of Operation	Fault LED, Green
Normal Mode	ON
Control is Non-functional	OFF
Test Mode	Slow Flash
Lockout Active	Fast Flash
Dehumidification Mode	Flash Code 2
(Future Use)	Flash Code 3
(Future Use)	Flash Code 4
Load Shed	Flash Code 5
ESD	Flash Code 6
(Future Use)	Flash Code 7

Configuration LED (LED2, Yellow)

Description of Operation	Configuration LED, Yellow
No Software Overwritten	Flashing ECM Setting
DIP Switch was Overwritten	Slow Flash
ECM Configuration Mode	Fast Flash

Fault LED (LED1, Red)

Description of Operation	Fault LED, Red
Normal Mode	OFF
Input Fault Lockout	Flash Code 1
High Pressure Lockout	Flash Code 2
Low Pressure Lockout	Flash Code 3
Freeze Detection 2 - (Future Use)	Flash Code 4
Freeze Detection 1 - (Coax)	Flash Code 5
(Future Use)	Flash Code 6
Condensate Overflow	Flash Code 7
Over/Under Voltage Shutdown	Flash Code 8
Freeze Detection Sensor Error (Sensor is Out of Range)	Flash Code 11

Aurora Interface and Design (AID) Tool

The Aurora Interface and Diagnostics (AID) Tool is a device that is a member of the Aurora network. The AID Tool is used to troubleshoot equipment which uses the Aurora control via Modbus RTU communication. The AID tool provides diagnostics, fault management, ECM setup, and system configuration capabilities to the Aurora family of controls. An AID Tool is recommended, although not required, for ECM airflow settings. The AID Tool simply plugs into the exterior of the cabinet in the AID Tool port.

ABC Control Board Layout

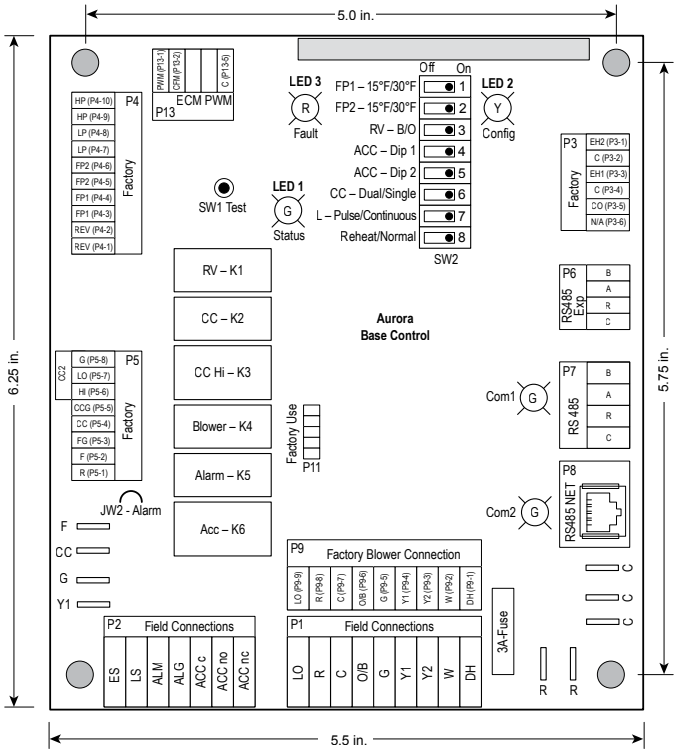

Operation Logic Data Table

Operation Logic Table	Heating					Cooling		
	STG1	STG2	STG3	EMERG	Blower Only	STG1	STG2	Blower Only
Compressor	On	On	On	Off	Off	On	On	Off
Reversing Valve	Off	Off	Off	Off	Off	On	On	On
Aux Heat	Off	Off	Staged	Staged	Off	Off	Off	Off
Acc Relay	On	On	On	Off	Off	On	On	Off
Blower Relay (PSC)	On	On	On	On	On	On	On	On
X13	Med Low	Med High	High	High	Low	Med Low	Med High	Low
ECM Speed	Med	High	High	High	Low	Med	High	Low
T-Stat Signal	Y1	Y1,Y2	Y1,Y2,W	W	G	Y1,O	Y1,Y2,O	G

2/10/12

The Aurora 'Advanced' Control System (Available July 1, 2012)

Aurora 'Advanced' Control
(Available July 1, 2012)

The Aurora 'Advanced' Control system expands on the capability of the Aurora 'Base' Control (ABC) system by adding the Aurora Expansion Board (AXB). The additional features include compressor current monitoring, loop pump slaving, intelligent hot water generator control, variable speed pump capability, and also allows for optional energy, refrigeration, and performance monitoring add-on sensor kits. This control will be available July 1, 2012.

Unit Startup

Before Powering Unit, Check the Following:

NOTE: Remove and discard the compressor hold down shipping bolt located at the front of the compressor mounting bracket.

- High voltage is correct and matches nameplate.
- Fuses, breakers and wire size correct.
- Low voltage wiring complete.
- Piping completed and water system cleaned and flushed.
- Air is purged from closed loop system.
- Isolation valves are open, water control valves or loop pumps wired.
- Condensate line open and correctly pitched.
- Transformer switched to 208V if applicable.
- Black/white and gray/white wires in unit control box have been removed if auxiliary heat has been installed.
- Dip switches are set correctly.
- Hot water generator pump switch is “OFF” unless piping is completed and air has been purged.
- Blower rotates freely.
- Blower speed is correct.
- Air filter/cleaner is clean and in position.
- Service/access panels are in place.
- Return air temperature is between 50-80°F heating and 60-95°F cooling.
- Check air coil cleanliness to insure optimum performance. Clean as needed according to maintenance guidelines. To obtain maximum performance the air coil should be cleaned before startup. A 10-percent solution of dishwasher detergent and water is recommended for both sides of coil, a thorough water rinse should follow.

Startup Steps

NOTE: Complete the Equipment Start-Up/Commissioning Check Sheet during this procedure. Refer to thermostat operating instructions and complete the startup procedure. Verify that the compressor shipping bolt has been removed.

1. Initiate a control signal to energize the blower motor. Check blower operation.
2. Initiate a control signal to place the unit in the cooling mode. Cooling setpoint must be set below room temperature.
3. First stage cooling will energize after a time delay.
4. Be sure that the compressor and water control valve or loop pump(s) are activated.
5. Verify that the water flow rate is correct by measuring the pressure drop through the heat exchanger using the P/T plugs and comparing to unit performance data in catalog.
6. Check the temperature of both the supply and discharge water (see the Unit Operating Parameters tables).
7. Check for an air temperature drop of 15°F to 25°F across the air coil, depending on the fan speed and entering water temperature.
8. Decrease the cooling set point several degrees and verify high-speed blower operation.
9. Adjust the cooling setpoint above the room temperature and verify that the compressor and water valve or loop pumps deactivate.
10. Initiate a control signal to place the unit in the heating mode. Heating set point must be set above room temperature.
11. First stage heating will energize after a time delay.
12. Check the temperature of both the supply and discharge water (see the Unit Operating Parameters tables).
13. Check for an air temperature rise of 12°F to 35°F across the air coil, depending on the fan speed and entering water temperature.
14. If auxiliary electric heaters are installed, increase the heating setpoint until the electric heat banks are sequenced on. All stages of the auxiliary heater should be sequenced on when the thermostat is in the Emergency Heat mode. Check amperage of each element.
15. Adjust the heating setpoint below room temperature and verify that the compressor and water valve or loop pumps deactivate.
16. During all testing, check for excessive vibration, noise or water leaks. Correct or repair as required.
17. Set system to desired normal operating mode and set temperature to maintain desired comfort level.
18. Instruct the owner/operator in the proper operation of the thermostat and system maintenance.

NOTE: Be certain to fill out and forward all warranty registration papers.

Operating Parameters

Single Speed Models

Entering Water Temp °F	Water Flow gpm/ton	Cooling -- No Hot Water Generation					
		Suction Pressure psig	Discharge Pressure psig	Superheat	Subcooling	Water Temp Rise °F	Air Temp Drop °F DB
30	1.5	115 - 125	150 - 170	20 - 35	10 - 17	17 - 22	17 - 23
	3.0	105 - 120	130 - 145	20 - 35	10 - 17	8 - 10	17 - 23
50	1.5	130 - 140	215 - 235	12 - 20	8 - 14	16 - 22	17 - 23
	3.0	128 - 138	190 - 210	12 - 20	8 - 14	8 - 12	17 - 23
70	1.5	138 - 148	280 - 310	10 - 16	10 - 16	15 - 21	17 - 23
	3.0	136 - 146	250 - 280	10 - 16	8 - 14	7 - 13	17 - 23
90	1.5	145 - 155	350 - 380	9 - 14	10 - 16	14 - 20	17 - 23
	3.0	143 - 153	320 - 350	9 - 14	8 - 14	6 - 10	17 - 23
110	1.5	145 - 155	420 - 450	9 - 14	10 - 16	14 - 20	17 - 23
	3.0	143 - 153	405 - 435	9 - 14	8 - 14	6 - 10	17 - 23

Entering Water Temp °F	Water Flow gpm/ton	Heating - No Hot Water Generation					
		Suction Pressure psig	Discharge Pressure psig	Superheat	Subcooling	Water Temp Drop °F	Air Temp Rise °F DB
30	1.5	73 - 85	270 - 305	8 - 14	3 - 10	6 - 10	15 - 21
	3.0	77 - 90	280 - 315	8 - 14	3 - 10	4 - 8	17 - 23
50	1.5	97 - 110	290 - 325	10 - 16	3 - 10	9 - 13	22 - 28
	3.0	102 - 115	300 - 335	10 - 16	3 - 10	7 - 11	24 - 30
70	1.5	130 - 145	320 - 355	13 - 19	3 - 10	10 - 14	30 - 36
	3.0	135 - 150	325 - 360	13 - 19	3 - 10	8 - 12	32 - 38
90	1.5	150 - 160	350 - 390	13 - 19	3 - 10	10 - 14	30 - 36
	3.0	155 - 165	365 - 405	13 - 19	3 - 10	8 - 12	32 - 38
110	1.5						
	3.0						

NOTE: Cooling performance based on entering air temperatures of 80º F DB, 67º F WB.
Heating performance based on entering air temperature of 70º F DB.

2/15/12

Operating Parameters cont.

Dual Capacity Models

First Stage Operation

Entering Water Temp °F	Water Flow gpm/ton	Cooling -- No Hot Water Generation					
		Suction Pressure psig	Discharge Pressure psig	Superheat	Subcooling	Water Temp Rise °F	Air Temp Drop °F DB
30	1.5	105 - 120	140 - 155	20 - 35	9 - 17	17 - 21	17 - 23
	3.0	100 - 115	115 - 130	20 - 35	9 - 17	8 - 12	17 - 23
50	1.5	125 - 140	205 - 225	12 - 20	8 - 14	17 - 21	17 - 23
	3.0	120 - 135	180 - 200	12 - 20	8 - 14	8 - 12	17 - 23
70	1.5	135 - 145	280 - 290	10 - 16	8 - 14	16 - 20	17 - 23
	3.0	133 - 143	250 - 260	10 - 16	8 - 14	9 - 13	17 - 23
90	1.5	142 - 152	345 - 355	8 - 12	8 - 14	14 - 20	17 - 23
	3.0	140 - 150	330 - 340	8 - 12	8 - 14	8 - 12	17 - 23
110	1.5	152 - 158	405 - 435	8 - 12	8 - 14	14 - 20	17 - 23
	3.0	148 - 153	390 - 420	8 - 12	8 - 14	8 - 12	17 - 23

Entering Water Temp °F	Water Flow gpm/ton	Heating -- No Hot Water Generation					
		Suction Pressure psig	Discharge Pressure psig	Superheat	Subcooling	Water Temp Drop °F	Air Temp Rise °F DB
30	1.5	76 - 84	270 - 285	8 - 12	3 - 10	5 - 9	12 - 16
	3.0	80 - 88	275 - 290	8 - 12	3 - 10	3 - 7	14 - 18
50	1.5	100 - 115	280 - 310	10 - 14	3 - 10	7 - 11	18 - 22
	3.0	105 - 120	290 - 315	10 - 14	3 - 10	5 - 9	20 - 24
70	1.5	135 - 150	310 - 325	12 - 16	3 - 10	8 - 12	24 - 28
	3.0	140 - 155	315 - 330	12 - 16	3 - 10	6 - 10	22 - 30
90	1.5	155 - 165	330 - 370	12 - 16	3 - 10	8 - 12	24 - 28
	3.0	160 - 170	340 - 380	12 - 16	3 - 10	6 - 10	22 - 30
110	1.5						
	3.0						

NOTE: Cooling performance based on entering air temperatures of 80º F DB, 67º F WB.
Heating performance based on entering air temperature of 70º F DB.

2/15/12

Second Stage Operation

Entering Water Temp °F	Water Flow gpm/ ton	Cooling -- No Hot Water Generation					
		Suction Pressure psig	Discharge Pressure psig	Superheat	Subcooling	Water Temp Rise °F	Air Temp Drop °F DB
30	1.5	115 - 125	150 - 170	20 - 35	10 - 17	17 - 22	17 - 23
	3.0	105 - 120	130 - 145	20 - 35	10 - 17	8 - 10	17 - 23
50	1.5	130 - 140	215 - 235	12 - 20	8 - 14	16 - 22	17 - 23
	3.0	128 - 138	190 - 210	12 - 20	8 - 14	8 - 12	17 - 23
70	1.5	138 - 148	280 - 310	10 - 16	10 - 16	15 - 21	17 - 23
	3.0	136 - 146	250 - 280	10 - 16	8 - 14	7 - 13	17 - 23
90	1.5	145 - 155	350 - 380	9 - 14	10 - 16	14 - 20	17 - 23
	3.0	143 - 153	320 - 350	9 - 14	8 - 14	6 - 10	17 - 23
110	1.5	145 - 155	420 - 450	9 - 14	10 - 16	14 - 20	17 - 23
	3.0	143 - 153	405 - 435	9 - 14	8 - 14	6 - 10	17 - 23

Entering Water Temp °F	Water Flow gpm/ ton	Heating -- No Hot Water Generation					
		Suction Pressure psig	Discharge Pressure psig	Superheat	Subcooling	Water Temp Drop °F	Air Temp Rise °F DB
30	1.5	73 - 85	270 - 305	8 - 14	3 - 10	6 - 10	15 - 21
	3.0	77 - 90	280 - 315	8 - 14	3 - 10	4 - 8	17 - 23
50	1.5	97 - 110	290 - 325	10 - 16	3 - 10	9 - 13	22 - 28
	3.0	102 - 115	300 - 335	10 - 16	3 - 10	7 - 11	24 - 30
70	1.5	130 - 145	320 - 355	13 - 19	3 - 10	10 - 14	30 - 36
	3.0	135 - 150	325 - 360	13 - 19	3 - 10	8 - 12	32 - 38
90	1.5	150 - 160	350 - 390	13 - 19	3 - 10	10 - 14	30 - 36
	3.0	155 - 165	365 - 405	13 - 19	3 - 10	8 - 12	32 - 38
110	1.5						
	3.0						

NOTE: Cooling performance based on entering air temperatures of 80º F DB, 67º F WB.
Heating performance based on entering air temperature of 70º F DB.

2/15/12

Pressure Drop

Single Speed

Model	gpm	Pressure Drop (psi)				
		30°F	50°F	70°F	90°F	110°F
012	1.5	0.3	0.3	0.3	0.3	0.3
	2.5	1.0	1.0	1.0	1.0	1.0
	3.5	1.7	1.7	1.7	1.6	1.6
	4.5	2.5	2.4	2.4	2.4	2.3
018	3.0	1.6	1.6	1.5	1.5	1.4
	4.0	2.9	2.9	2.8	2.8	2.7
	5.0	4.2	4.2	4.1	4.0	3.9
	6.0	6.0	5.8	5.7	5.6	5.5
022	3	0.9	0.9	0.8	0.7	0.7
	4.5	1.7	1.6	1.5	1.4	1.3
	6	2.8	2.7	2.5	2.3	2.2
	8	4.7	4.4	4.1	3.9	3.6
030	4	1.3	1.2	1.2	1.1	1.0
	6	2.7	2.5	2.4	2.2	2.2
	8	4.5	4.2	3.9	3.7	3.4
	10	6.8	6.3	5.4	5.4	5.0
036	5	1.0	1.0	0.9	0.8	0.8
	7	2.1	1.9	1.8	1.7	1.6
	9	3.6	3.3	3.0	2.8	2.6
	12	6.3	5.9	5.5	5.1	4.8
042	5	0.8	0.7	0.7	0.7	0.6
	8	2.1	2.1	1.9	1.8	1.7
	11	4.2	4.1	3.8	3.5	3.3
	14	7.6	6.7	6.3	5.8	5.4
048	6	1.1	1.0	1.0	0.9	0.8
	9	2.3	2.1	2.0	1.9	1.7
	12	3.9	3.7	3.4	3.2	3.0
	16	6.7	6.3	5.9	5.5	5.1
060	9	2.4	2.2	2.1	2.0	1.8
	12	3.9	3.6	3.4	3.2	2.9
	15	5.7	5.3	5.0	4.7	4.3
	20	9.5	8.9	8.3	7.8	7.2
070	12	3.0	2.8	2.6	2.4	2.2
	15	4.4	4.0	3.8	3.5	3.3
	18	6.0	5.5	5.1	4.8	4.4
	24	9.7	9.1	8.5	7.9	7.3

2/7/12

Dual Capacity

Model	gpm	Pressure Drop (psi)				
		30°F	50°F	70°F	90°F	110°F
026 full load	4	1.4	1.3	1.2	1.1	1.0
	6	2.8	2.6	2.4	2.3	2.1
	8	4.7	4.4	4.1	3.8	3.5
	10	7.0	6.6	6.2	5.8	5.3
026 part load	3	0.8	0.7	0.7	0.7	0.6
	5	2.0	1.8	1.7	1.6	1.5
	7	3.6	3.4	3.2	3.0	2.8
	9	5.8	5.5	5.1	4.8	4.4
038 full load	5	1.2	1.2	1.1	1.0	1.0
	7	2.2	2.1	1.9	1.8	1.7
	9	3.4	3.2	3.0	2.8	2.6
	11	4.9	4.6	4.3	4	3.7
038 part load	4	0.9	0.8	0.8	0.7	0.7
	6	1.7	1.6	1.5	1.4	1.3
	8	2.8	2.6	2.5	2.3	2.1
	10	4.2	3.9	3.7	3.4	3.2
049 full load	6	1.2	1.2	1.1	1.0	1.0
	9	2.4	2.2	2.1	2.0	1.8
	12	3.9	3.6	3.4	3.2	2.9
	15	5.7	5.3	5	4.7	4.3
049 part load	5	0.9	0.9	0.8	0.8	0.7
	8	2.0	1.8	1.7	1.6	1.5
	11	3.4	3.1	2.9	2.8	2.5
	14	5.0	4.7	4.4	4.1	3.8
064 full load	8	1.8	1.7	1.6	1.4	1.3
	12	3.8	3.5	3.3	3.0	2.8
	16	6.5	6.0	5.6	5.2	4.8
	20	9.7	9.1	8.5	8.0	7.4
064 part load	6	1.0	0.9	0.9	0.8	0.8
	10	2.6	2.5	2.3	2.1	2.0
	14	5.0	4.7	4.4	4.1	3.8
	18	8.1	7.6	7.1	6.6	6.1
072 full load	12	3.2	3.0	2.8	2.6	2.4
	15	4.5	4.2	4.0	3.7	3.4
	18	6.0	5.7	5.3	4.9	4.6
	21	7.8	7.3	6.8	6.4	5.9
072 part load	10	2.3	2.1	2.0	1.9	1.7
	13	3.6	3.3	3.0	2.8	2.6
	16	5.0	4.6	4.3	4.0	3.7
	19	6.5	6.2	5.8	5.4	5.0

1/26/12

Compressor Resistance

Model	Compressor Model No.	208-230/60/1	
		Run	Start
012	GK102KAA	3.35 - 3.85	2.80 - 3.22
018	GK151KAA	2.24 - 2.58	2.84 - 3.26
022	ZP16K5E-PFV	1.39 - 1.53	2.15 - 2.30
030	ZP21K5E-PFV	1.21 - 1.39	1.53 - 1.75
036	ZP25K5E-PFV	0.95 - 1.09	1.81 - 2.09
042	ZP31K5E-PFV	0.83 - 0.95	1.54 - 1.78
048	ZP38K5E-PFV	0.51 - 0.59	1.13 - 1.31
060	ZP51K5E-PFV	0.42 - 0.48	0.73 - 0.85
070	ZP57K5E-PFV	0.33 - 0.39	0.90 - 1.04
026	ZPS20K5E-PFV	1.21 - 1.39	1.52 - 1.75
038	ZPS30K5E-PFV	0.81 - 0.94	1.41 - 1.63
049	ZPS40K5E-PFV	0.48 - 0.55	1.72 - 1.99
064	ZPS51K5E-PFV	0.36 - 0.42	1.51 - 1.74
072	ZPS60K5E-PFV	0.31 - 0.36	1.72 - 1.98

2/7/12

Thermistor Resistance

Thermistor Temperature (°F)	Microprocessor Resistance (Ohms)
5	75757-70117
14	57392-53234
23	43865-40771
32	33809-31487
41	26269-24513
50	20570-19230
59	16226-15196
68	12889-12093
77	10310-9688
86	8300-7812
95	6723-6337
104	5480-5172
113	4490-4246
122	3700-3504
131	3067-2907
140	2554-2424
149	2149-2019

2/8/12

Refrigerant Circuit Guideline

Symptom	Head Pressure	Suction Pressure	Compressor Amp Draw	Superheat	Subcooling	Air Temp. Differential	Water Temp. Differential
Under Charged System (Possible Leak)	Low	Low	Low	High	Low	Low	Low
Over Charged System	High	High	High	Normal	High	Normal/Low	Normal
Low Air Flow Heating	High	High	High	High/Normal	Low	High	Low
Low Air Flow Cooling	Low	Low	Low	Low/Normal	High	High	Low
Low Water Flow Heating	Low/Normal	Low/Normal	Low	Low	High	Low	High
Low Water Flow Cooling	High	High	High	High	Low	Low	High
High Air Flow Heating	Low	Low	Low	Low	High	Low	Low
High Air Flow Cooling	Low	High	Normal	High	Low	Low	Normal
High Water Flow Heating	Normal	Low	Normal	High	Normal	Normal	Low
High Water Flow Cooling	Low	Low	Low	Low	High	Normal	Low
Low Indoor Air Temperature Heating	Low	Low	Low	Normal	High	Normal	Normal/High
Low Indoor Air Temperature Cooling	Low	Low	Low	Normal/Low	High	Low	Low
High Indoor Air Temperature Heating	High	High	High	Normal/High	Normal/Low	Low	Normal
High Indoor Air Temperature Cooling	High	High	High	High	Low	Low	High
Restricted TXV (Check Service Advisory)	High	Low	Normal/Low	High	High	Low	Low
Insufficient Compressor (Possible Bad Valves)	Low	High	Low	High	Normal/High	Low	Low
TXV - Bulb Loss of Charge	Low	Low	Low	High	High	Low	Low
Scaled Coaxial Heat Exchanger Heating	Low	Low	Low	Normal/Low	High	Low	Low
Scaled Coaxial Heat Exchanger Cooling	High	High	High	Normal/Low	Low	Low	Low
Restricted Filter Drier	Check temperature difference (delta T) across filter drier.						

7/6/10

Heat of Extraction/Rejection

Single Speed

Model	gpm	Heat of Extraction (kBtuh)				Heat of Rejection (kBtuh)				
		30°F	50°F	70°F	90°F	30°F	50°F	70°F	90°F	110°F
012	1.5		7.4	9.6	12.5		16.9	16.5	15.8	
	2.5	5.9	7.7	10.1	12.7	17.3	16.9	16.4	15.9	16.0
	3.5	6.1	8.1	10.6	12.9	17.4	16.9	16.4	16.0	16.1
018	3.0		11.4	13.9	19.1		23.0	21.6	20.5	
	4.0	10.1	12.2	14.8	19.5	21.1	23.3	21.7	20.5	20.1
	5.0	10.4	13.1	15.8	19.8	21.2	23.6	21.9	20.7	20.1
022	3.0		14.2	18.8	22.9		28.8	28.5	26.1	
	4.5	10.3	15.0	19.9	24.0	26.2	29.0	28.6	26.1	24.8
	6.0	10.5	15.4	20.2	24.5	26.4	29.2	28.6	26.2	24.8
030	4.0		20.0	26.0	31.0		35.1	35.4	33.1	
	6.0	14.6	20.8	27.1	32.3	32.6	35.0	35.3	33.0	29.3
	8.0	14.9	21.3	27.6	32.8	32.9	35.3	35.5	33.2	29.4
036	5.0		23.8	31.3	37.6		41.5	42.7	40.8	
	7.0	17.7	24.9	32.6	39.2	34.9	41.4	42.6	40.7	38.0
	9.0	18.1	25.5	33.2	39.8	35.3	41.8	42.9	40.9	38.2
042	5.0		27.2	33.7	40.0		50.2	51.2	48.8	
	8.0	21.0	28.5	35.5	42.4	46.9	50.4	51.5	49.1	45.9
	11.0	21.4	29.3	36.6	43.9	47.2	50.7	51.8	49.3	45.9
048	6.0		35.1	43.9	51.2		60.6	60.5	57.0	
	9.0	26.8	36.7	46.3	54.3	56.2	60.8	60.9	57.4	53.8
	12.0	27.3	37.7	47.7	56.2	56.5	61.1	61.1	57.5	53.8
060	9.0		44.1	56.3	65.1		83.1	81.3	76.5	
	12.0	31.5	45.5	57.5	69.1	80.2	82.9	81.6	76.3	71.9
	15.0	32.6	46.4	59.9	70.0	80.8	83.2	81.2	76.5	72.0
070	12.0		52.4	66.9	78.1		91.1	89.5	83.0	
	15.0	37.9	53.7	69.8	82.9	83.4	91.2	89.4	82.7	76.8
	18.0	38.1	54.3	70.9	84.8	83.8	91.9	90.3	83.6	77.6

NOTE: Operation not recommended in shaded areas. 2/13/12

Dual Capacity

Model		gpm	Heat of Extraction (kBtuh)				Heat of Rejection (kBtuh)				
			30°F	50°F	70°F	90°F	30°F	50°F	70°F	90°F	110°F
026	Part Load	3.0		14.0	18.8	22.8		26.7	26.6	24.3	
		5.0	10.2	14.8	19.8	24.0	24.7	26.8	26.7	24.2	22.2
		7.0	10.3	15.1	20.1	24.4	25.0	27.0	26.7	24.3	22.2
	Full Load	4.0		18.6	24.3	29.6		34.8	34.9	33.4	
		6.0	14.0	19.7	25.7	31.1	33.6	34.9	35.0	33.3	31.1
		8.0	14.3	20.1	26.1	31.7	33.9	35.1	35.1	33.4	31.1
038	Part Load	4.0		17.6	22.8	27.5		35.3	34.5	32.4	
		6.0	12.6	18.3	24.0	29.2	32.5	35.6	34.7	32.5	30.3
		8.0	13.6	19.3	24.6	29.2	33.0	36.1	35.2	32.9	30.7
	Full Load	5.0		25.1	31.4	35.9		48.3	48.5	45.8	
		7.0	18.8	26.2	33.1	38.4	45.2	48.8	49.2	46.7	43.6
		9.0	19.2	26.9	34.1	39.7	45.5	49.1	49.6	47.0	43.8
049	Part Load	5.0		23.2	28.6	32.7		47.4	48.5	46.2	
		8.0	18.4	25.6	31.7	36.5	42.9	47.5	48.3	45.6	42.2
		11.0	19.1	26.6	33.4	38.9	42.4	47.5	48.7	46.5	43.3
	Full Load	6.0		33.5	40.8	46.2		63.4	63.2	59.0	
		9.0	26.1	34.8	43.0	49.3	59.1	63.5	63.9	60.1	55.0
		12.0	26.7	35.8	44.4	51.1	59.3	63.7	64.3	60.3	55.3
064	Part Load	6.0		32.6	41.0	48.0		60.6	59.4	55.5	
		10.0	22.8	32.9	42.7	51.8	56.5	60.5	59.5	55.8	52.2
		14.0	23.9	34.1	43.6	51.9	56.3	60.5	59.6	56.1	52.5
	Full Load	8.0		43.9	56.4	69.0		81.0	82.9	76.5	
		12.0	34.5	47.0	58.9	70.2	73.7	81.5	83.4	76.7	71.4
		16.0	34.9	47.9	60.7	73.1	74.1	82.0	83.8	77.2	71.5
072	Part Load	10.0		36.8	47.0	55.3		68.4	67.9	63.2	
		13.0	25.5	37.1	49.1	59.7	62.4	68.3	67.9	63.5	58.8
		16.0	27.1	38.6	50.0	59.8	61.9	68.3	68.2	63.8	59.1
	Full Load	12.0		50.2	65.1	78.2		89.6	88.1	84.6	
		15.0	38.7	53.7	67.8	79.4	80.9	90.0	91.0	84.9	77.8
		18.0	39.1	54.7	70.0	82.7	81.5	90.6	91.5	85.3	78.1

NOTE: Operation not recommended in shaded areas. 2/13/12

Reference Calculations

Heating Calculations:	Cooling Calculations:
$LWT = EWT - \frac{HE}{gpm \times 500}$	$LWT = EWT + \frac{HR}{gpm \times 500}$
$LAT = EAT + \frac{HC}{cfm \times 1.08}$	$LAT\ (DB) = EAT\ (DB) - \frac{SC}{cfm \times 1.08}$
$TH = HC + HW$	$LC = TC - SC$
	$S/T = \frac{SC}{TC}$

Legend

Abbreviations and Definitions

cfm = airflow, cubic feet/minute
EWT = entering water temperature, Fahrenheit
gpm = water flow in gallons/minute
WPD = water pressure drop, psi and feet of water
EAT = entering air temperature, Fahrenheit (dry bulb/wet bulb)
HC = air heating capacity, MBtu/h
TC = total cooling capacity, MBtu/h
SC = sensible cooling capacity, MBtu/h
kW = total power unit input, kilowatts
HR = total heat of rejection, MBtu/h
HE = total heat of extraction, MBtu/h
HWC = hot water generator capacity, MBtu/h
EER = Energy Efficient Ratio
= Btu output/Watt input
COP = Coefficient of Performance
= Btu output/Btu input
LWT = leaving water temperature, °F
LAT = leaving air temperature, °F
TH = total heating capacity, MBtu/h
LC = latent cooling capacity, MBtu/h
S/T = sensible to total cooling ratio

Troubleshooting

Aurora Control System

NOTE: Refer to the Aurora Base Control Application and Troubleshooting Guide and the Instruction Guide: Aurora Interface and Diagnostics (AID) Tool for additional information.

To check the unit control board for proper operation:
1. Disconnect thermostat wires at the control board.
2. Jumper the desired test input (Y1, Y2, W, O or G) to the R terminal to simulate a thermostat signal.
3. If control functions properly:
    - Check for thermostat and field control wiring (use the diagnostic inputs mode).
4. If control responds improperly:
    - Ensure that component being controlled is functioning (compressor, blower, reversing valve, etc.).
    - Ensure that wiring from control to the component is functioning (refer to the LED Definition table below and use the diagnostic outputs mode).
    - If steps above check properly, replace unit control.

Refrigerant Systems

To maintain sealed circuit integrity, do not install service gauges unless unit operation appears abnormal. Compare the change in temperature on the air side as well as the water side to the Unit Operating Parameters tables. If the unit's performance is not within the ranges listed, and the airflow and water flow are known to be correct, gauges should then be installed and superheat and subcooling numbers calculated. If superheat and subcooling are outside recommended ranges, an adjustment to the refrigerant charge may be necessary.

NOTE: Refrigerant tests must be made with hot water generator turned "OFF". Verify that air and water flow rates are at proper levels before servicing the refrigerant circuit.

Preventive Maintenance

Water Coil Maintenance

1. Keep all air out of the water. An open loop system should be checked to ensure that the well head is not allowing air to infiltrate the water line. Lines should always be airtight.
2. Keep the system under pressure at all times. It is recommended in open loop systems that the water control valve be placed in the discharge line to prevent loss of pressure during off cycles. Closed loop systems must have positive static pressure.

NOTE: On open loop systems, if the installation is in an area with a known high mineral content (125 PPM or greater) in the water, it is best to establish with the owner a periodic maintenance schedule so the coil can be checked regularly. Should periodic coil cleaning be necessary, use standard coil cleaning procedures which are compatible with either the cupronickel or copper water lines. Generally, the more water flowing through the unit the less chance for scaling.

Other Maintenance

Filters

Filters must be clean to obtain maximum performance. They should be inspected monthly under normal operating conditions and be replaced when necessary. Units should never be operated without a filter.

Condensate Drain

In areas where airborne bacteria produce a slime in the drain pan, it may be necessary to treat chemically to minimize the problem. The condensate drain can pick up lint and dirt, especially with dirty filters. Inspect twice a year to avoid the
possibility of overflow.

Blower Motors

ECM blower motors are equipped with sealed ball bearings and require no periodic oiling.

PSC blower motors should only be lubricated if dry operation is suspected.

Hot Water Generator Coil

See Water Coil Maintenance section above.

Air Coil

The air coil must be cleaned to obtain maximum performance. Check once a year under normal operating conditions and, if dirty, brush or vacuum (with a brush attachment) clean. Care must be taken not to damage the aluminum fins while cleaning.

CAUTION: Fin edges are sharp.

Replacement Procedures

Obtaining Parts

When ordering service or replacement parts, refer to the model number and serial number of the unit as stamped on the serial plate attached to the unit. If replacement parts are required, mention the date of installation of the unit and the date of failure, along with an explanation of the malfunctions and a description of the replacement parts required.

In-Warranty Material Return

Material may not be returned except by permission of authorized warranty personnel. Contact your local distributor for warranty return authorization and assistance.

Service Parts List

Parts List		Single Speed Units								
		012	018	022	030	036	042	048	060	070
Compressor	Compressor 208-230/60/1	34P591-01	34P593-01	34P581-01	34P582-01	34P583-01	34P578-01	34P579-01	34P580-01	34P646-01
	Run Capacitor 208-230/60/1	16P002D18	16P002D19	16P002D18	16P002D20	16P002D20	16P002D21	16P002D21	16P002D25	16P002D24
	Sound Jacket	92P504A01	92P504A01	92P504A05	92P504A05	92P504A05	92P504A05	92P504A05	92P504A05	92P504A03
	Power Harness	11P521A01	11P521A01	11P781-01	11P781-01	11P781-01	11P781-01	11P781-01	11P781-01	11P781-01
	Solenoid Harness	n/a	n/a	n/a	n/a	n/a	n/a	n/a	n/a	n/a
ECM Motor & Blower	ECM Motor 208-230/60/1	n/a	14P515B01	14P515B01	14P515B01	14P516B01	14P516B01	14P516B01	14P517B01	14P517B01
	ECM Blower Housing	n/a	53P500B01	53P500B01	53P500B01	53P501B01	53P501B01	53P501B01	53P501B01	53P501B01
	ECM Harness	n/a	11P607B02	11P607B02	11P607B02	11P607B02	11P607B02	11P607B02	11P607B02	11P607B02
	ECM Power Harness	n/a	11P585B02	11P585B02	11P585B02	11P585B02	11P585B02	11P585B02	11P585B02	11P585B02
PSC Motor & Blower	PSC Motor 208-230/60/1	14P506-02	14P507B01	14P508B01	14P509B01	14P511B01	14P512B01	14P512B01	14P514B01	14P514B01
	PSC Blower & Housing	53P506B01	53P512B01	53P500B01	53P500B01	53P517-01	53P517-01	53P517-01	53P501B01	53P501B01
X13 ECM Motor & Blower	X13 ECM Motor 208-230/60/1	n/a	n/a	14S536-01	14S536-02	14S536-13	14S537-01	14S537-01	14S537-07	14S537-03
	X13 ECM Blower Housing	n/a	n/a	53P500B01	53P500B01	53P501B01	53P501B01	53P501B01	53P501B01	53P501B01
Air Filters	2 in. Air Filters (Horizontal Model) and Second Filter If Needed	59P509-01	59P509-13	59P509-09	59P509-09	59P509-10	59P509-02	59P509-02	59P509-03	59P509-03
		n/a	n/a	n/a	n/a	n/a	59P509-11	59P509-11	59P509-11	59P509-11
	2 in. Air Filters (Vertical Model)	59P509-01	59P509-12	59P509-04	59P509-04	59P509-08	59P509-07	59P509-07	59P509-06	59P509-06
Refrigeration Components	Air Coil (Vertical Model)	61S601-02	61S502C02	61S603-02	61P648-02	61S605-02	61S606-02	61S606-02	61S701-02	61S701-02
	Air Coil (Horizontal Model)	61S601-02	61S508C02	61S609-02	61S610-02	61S611-02	61S612-02	61S612-02	61S613-02	61S613-02
	Coax	62I502A01	62I503A01	62I504-01	62I588-01	62I542A01	62I542A01	62I543A01	62I543A01	62I555-01
	TXV	33P608-13	33P608-02	33P619-01	33P619-02	33P619-02	33P619-03	33P619-03	33P619-04	33P619-05
	Reversing Valve	33P502-05	33P502-05	33P506-04	33P506-04	33P503-05	33P503-05	33P526-05	33P526-05	33P526-05
	Discharge Muffler	n/a	n/a	36P503B02	36P503B02	36P503B02	36P503B02	36P503B02	36P503B02	36P503B02
	Filter Dryer	36P500B01	36P500B01	36P500B01	36P500B01	36P500B01	36P500B01	36P500B01	36P500B02	36P500B02
Hot Water Generator	Hot Water Generator	n/a	62P516-05	62P516-05	62P516-05	62P516-05	62P516-03	62P516-03	62P516-03	62P516-03
	Hot Water Generator Pump	n/a	24P501A01	24P501A01	24P501A01	24P501A01	24P501A01	24P501A01	24P501A01	24P501A01
Electrical	Contactor	13P004A03	13P004A03	13P004A03	13P004A03	13P004A03	13P004A03	13P004A03	13P004A03	13P004A03
	Transformer 208-230/60/1	15P501B01	15P501B01	15P501B01	15P501B01	15P501B01	15P501B01	15P501B01	15P501B01	15P501B01
	3 Pole Power Block	12P503-06	12P503-06	12P503-06	12P503-06	12P503-06	12P503-06	12P503-06	12P503-06	12P503-06
	2 Pole Screw Term. Block	12P500A01	12P500A01	12P500A01	12P500A01	12P500A01	12P500A01	12P500A01	12P500A01	12P500A01
	ABC Board	17P553-01	17P553-01	17P553-01	17P553-01	17P553-01	17P553-01	17P553-01	17P553-01	17P553-01
	AXB Board	17P557-01	17P557-01	17P557-01	17P557-01	17P557-01	17P557-01	17P557-01	17P557-01	17P557-01
Sensors & Safeties	Low Water Coil Limit Thermistor	12P505-09	12P505-09	12P505-09	12P505-09	12P505-09	12P505-09	12P505-09	12P505-09	12P505-09
	HWL Thermistor	n/a	12P505B02	12P505B02	12P505B02	12P505B02	12P505B02	12P505B02	12P505B02	12P505B02
	HW Thermo-switch SPNC 130°F	n/a	13P073B05	13P073B05	13P073B05	13P073B05	13P073B05	13P073B05	13P073B05	13P073B05
	High Pressure Switch	SKHPE600	SKHPE600	SKHPE600	SKHPE600	SKHPE600	SKHPE600	SKHPE600	SKHPE600	SKHPE600
	Low Pressure Switch	SKLPE40	SKLPE40	SKLPE40	SKLPE40	SKLPE40	SKLPE40	SKLPE40	SKLPE40	SKLPE40

Part numbers subject to change 2/29/12

Service Parts List cont.

Parts List		Dual Capacity Units				
		026	038	049	064	072
Compressor	Compressor 208-230/60/1	34P640-01	34P641-01	34P642-01	34P643-01	34P644-01
	Run Capacitor 208-230/60/1	16P002D19	16P002D20	16P002D18	16P002D31	16P002D31
	Sound Jacket	92P504A16	92P504A16	92P504A16	92P504A16	92P504A16
	Power Harness	11P781-01	11P781-01	11P781-01	11P781-01	11P781-01
	Solenoid Harness	11P782-02	11P782-02	11P782-02	11P782-02	11P782-02
ECM Motor & Blower	ECM Motor 208-230/60/1	14P515B01	14P516B01	14P516B01	14P517B01	14P517B01
	ECM Blower Housing	53P500B01	53P501B01	53P501B01	53P501B01	53P501B01
	ECM Harness	11P607B01	11P607B01	11P607B01	11P607B01	11P607B01
	ECM Power Harness	11P585B01	11P585B01	11P585B01	11P585B01	11P585B01
PSC Motor & Blower	PSC Motor 208-230/60/1	n/a	n/a	n/a	n/a	n/a
	PSC Blower & Housing	n/a	n/a	n/a	n/a	n/a
X13 ECM Motor & Blower	X13 ECM Motor 208-230/60/1	14S536-12	14S536-13	14S537-01	14S537-07	14S537-03
	X13 ECM Blower Housing	53P500B01	53P501B01	53P501B01	53P501B01	53P501B01
Air Filters	2 in. Air Filters (Horizontal Model) and Second Filter If Needed	59P509-09	59P509-10	59P509-02	59P509-03	59P509-03
		n/a	n/a	59P509-11	59P509-11	59P509-11
	2 in. Air Filters (Vertical Model)	59P509-04	59P509-08	59P509-07	59P509-06	59P509-06
Refrigeration Components	Air Coil (Vertical Model)	61S603-02	61S605-02	61S606-02	61S701-02	61S701-02
	Air Coil (Horizontal Model)	61S609-02	61S611-02	61S612-02	61S649-02	61S649-02
	Coax	62I504-01	62I542A01	62I543A01	62I543A01	62I555-01
	TXV	33P619-01	33P619-02	33P619-03	33P619-04	33P619-05
	Reversing Valve	33P506-04	33P503-05	33P526-05	33P526-05	33P526-05
	Discharge Muffler	36P503B02	36P503B02	36P503B02	36P503B02	36P503B02
	Filter Dryer	36P500B01	36P500B01	36P500B01	36P500B02	36P500B02
Hot Water Generator	Hot Water Generator	62P516-05	62P516-05	62P516-03	62P516-03	62P516-03
	Hot Water Generator Pump	24P501A01	24P501A01	24P501A01	24P501A01	24P501A01
Electrical	Contactor	13P004A03	13P004A03	13P004A03	13P004A03	13P004A03
	Transformer 208-230/60/1	15P501B01	15P501B01	15P501B01	15P501B01	15P501B01
	3 Pole Power Block	12P503-06	12P503-06	12P503-06	12P503-06	12P503-06
	2 Pole Screw Term. Block	12P500A01	12P500A01	12P500A01	12P500A01	12P500A01
	ABC Board	17P553-01	17P553-01	17P553-01	17P553-01	17P553-01
	AXB Board	17P557-01	17P557-01	17P557-01	17P557-01	17P557-01
Sensors & Safeties	Low Water Coil Limit Thermistor	12P505-09	12P505-09	12P505-09	12P505-09	12P505-09
	HWL Thermistor	12P505B02	12P505B02	12P505B02	12P505B02	12P505B02
	HW Thermo-switch SPNC 130°F	13P073B05	13P073B05	13P073B05	13P073B05	13P073B05
	High Pressure Switch	SKHPE60	SKHPE60	SKHPE60	SKHPE60	SKHPE60
	Low Pressure Switch	SKLPE40	SKLPE40	SKLPE40	SKLPE40	SKLPE40

Part numbers subject to change 2/29/12

Smarter from the Ground Up™

Manufactured by
WaterFurnace International, Inc.
9000 Conservation Way
Fort Wayne, IN 46809
www.waterfurnace.com

Product:	**5 Series 500A11**
Type:	Geothermal Heat Pump
Size:	1-6 Ton Single Speed
	2-6 Ton Dual Capacity
Document:	Installation Manual

PROUD MEMBER

Water Source HP
ANSI/AHRI/ASHRAE/ISO13256-1

ENERGY STAR PARTNER

©2012 WaterFurnace International, Inc., 9000 Conservation Way, Fort Wayne, IN 46809-9794. WaterFurnace has a policy of continual product research and development and reserves the right to change design and specifications without notice.

IM2500AN 03/12